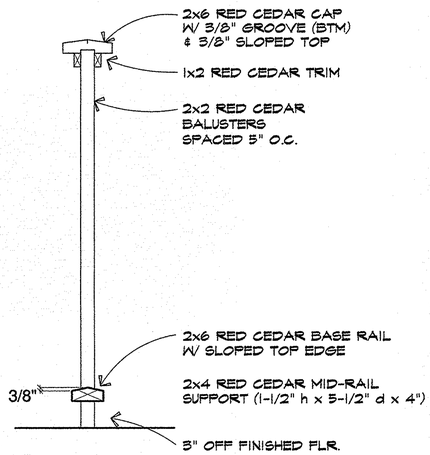

1-1/2" = 1'-0" **RAMP GUARD RAIL** (1)

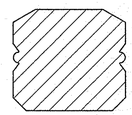

FULL SCALE **TOP RAIL** (2)

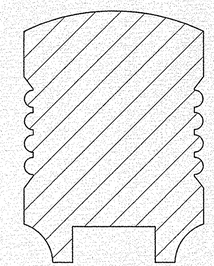

FULL SCALE **HANDRAIL** (3)

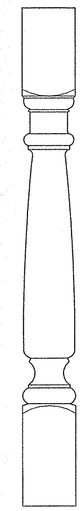

3" = 1'-0" **BALUSTERS** (4)

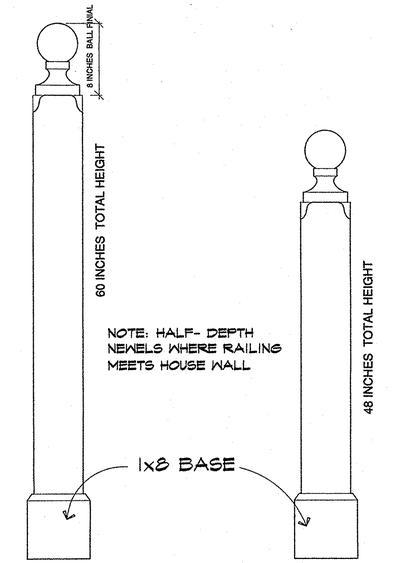

1-1/2" = 1'-0" **NEWEL POSTS** (5)

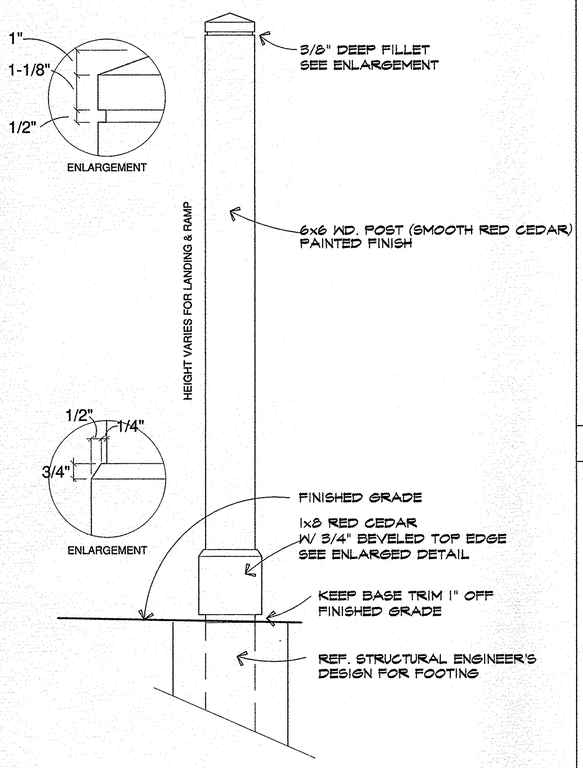

3" = 1'-0" **TYP. POST @ NEW RAMP** (6)

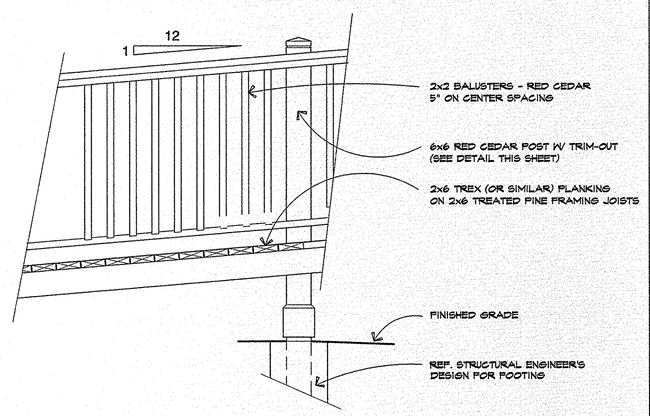

3/4" = 1'-0" **TYP. RAMP CONSTRUCTION** (7)

NOTES:

1. SECTIONS AND DETAILS AS SHOWN ARE PRELIMINARY, PENDING REVIEW OF STRUCTURAL ENGINEER.

2. ALL EXTERIOR WOOD IS TO BE BACK-PRIMED AND PAINTED, UTILIZING THE BUILDING PAINT COLORS THAT HAVE BEEN APPROVED BY THE CITY OF AUSTIN LANDMARK COMMISSION. THE RAMP FLOOR SURACES ARE TO BE STAINED & SEALED.

3. THE FRONT PORCH STEPS ARE TO BE BACK-PRIMED AND PAINTED. THE SECOND FINISH COAT IS TO INCLUDE A SLIP-RESISTANT ADDITIVE.

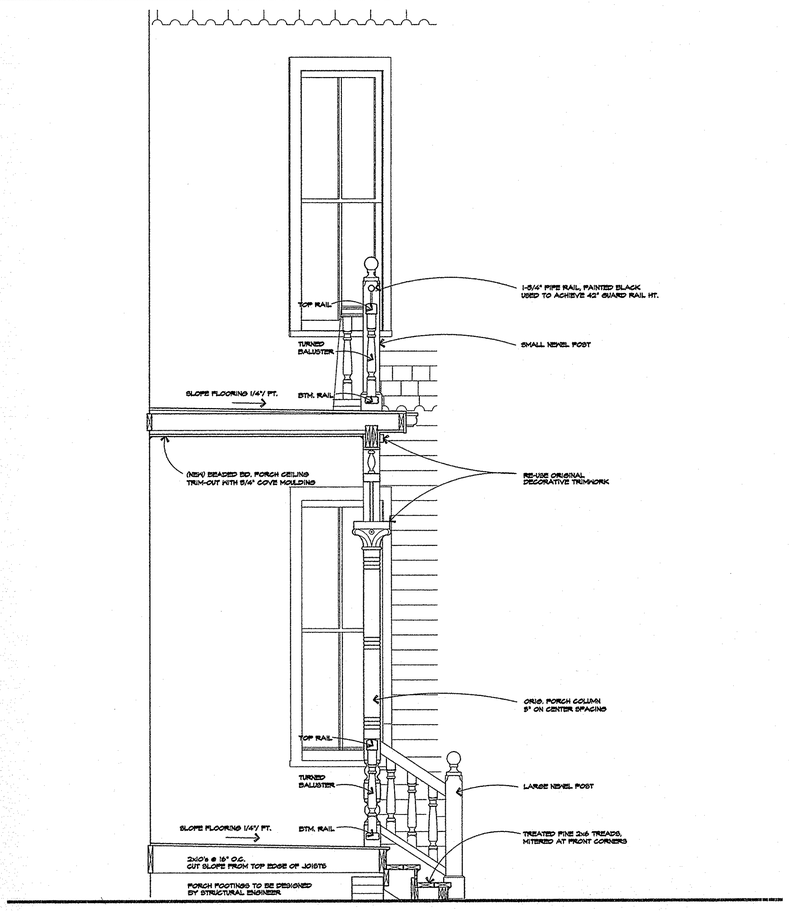

1/2" = 1'-0" **PORCH SECTION** (8)

ELECTRONIC DRAWING FILES

If this drawing is provided as an electronic file, it is released on the date shown below under the authority of William Scott Field, Texas Registered Architect No. 10232, who maintains the original file. Pursuant to Rule 1.103(f) of the Rules and Regulations of the Texas Board of Architectural Examiners (TBAE), the user of this electronic drawing file agrees to assume all responsibility of any modification to or use of this drawing file that is inconsistent with the requirements of the Rules and Regulations of the TBAE. No person may make any modification to this electronic drawing file without the Architect's express written permission.

COPYRIGHT STATEMENT

This drawing is protected by U.S. Copyright law. No person may utilize this drawing, or portions of this drawing, for any purpose without our express written permission.

© Wm. Scott Field, Architect, 2013

SHEET TITLE

PORCH & RAMP

DETAILS

PORCH SECTION

FRONT PORCH

RESTORATION & RAMP

HELIOS CO-OP

1909 NUECES STREET

AUSTIN TX 78705

FOR

I.C.C.

Wm. Scott Field, Architect
P.O. Box 2506
Galveston, TX 77553-2506

TEL 409. 765. 1717
MOBILE 409. 692. 1100

E-mail WSFarchitect@gmail.com

- ☐ PRELIMINARY DESIGN
- ☐ PROGRESS DRAWING
- ☐ ISSUED FOR PRICING
- ☐ ISSUED FOR PERMIT
- ☐ ISSUED FOR CONSTRUCTION
- ■ ISSUED FOR CITY REVIEW
- ☐ REVISIONS:

PROJECT NO. 21205

SHEET NO. A-2

DATE 25 MARCH 2013