C15-2013-012
TP-0304020308
ROW-11036142

CITY OF AUSTIN
APPLICATION TO BOARD OF ADJUSTMENT
INTERPRETATIONS
PART I: APPLICANT'S STATEMENT
(Please type)

STREET ADDRESS: 2100 Travis Heights Blvd

LEGAL DESCRIPTION: Subdivision –

Travis Heights

Lot (s) 5 Block 20 Outlot _____ Division _____

ZONING DISTRICT: SF-3

WE Dick Clark + Associates on behalf of ourselves as authorized Agent

for Tommy Siragusa and Angella Emmett at 2100 Travis Heights Blvd affirm

that on The 16th Day of October, 2013, hereby apply for an interpretation hearing before the

Board of Adjustment.

Planning and Development Review Department interpretation is:

That the LDC 25-2 Subchapter F – Article 3.3. Basement exemption does not apply to the Gross Floor Area of a Second Dwelling Unit.

I feel the correct interpretation is:

That all of the LDC 25-2 Subchapter F – Article 3.3 Gross Floor Area exemptions apply to Gross Floor Area of a Second Dwelling Unit.

NOTE: The board must determine the existence of, sufficiency of and weight of evidence supporting the findings described below. Therefore, you must complete each of the applicable findings statements as part of your application. Failure to do so may result in your application being rejected as incomplete. Please attach any additional support documents.

1. There is a reasonable doubt of difference of interpretation as to the specific intent of the regulations or map in that:

The Base Code and the Definition of Gross Floor Area has been modified by LDC 25-2 Subchapter F – Article 3.3 to include exemptions for Parking Areas, Porches, Basements and Attics. The language written in LDC 25-2 Subchapter F then controls over the definition of Gross Floor Area including exemptions for Parking Areas, Porches, Basements and Attics.

(See BOA Interpretation Addendum No. 1 – attached)

2. An appeal of use provisions could clearly permit a use which is in character with the uses enumerated for the various zones and with the objectives of the zone in question because:

We are not asking the city to do anything new or different. We are not asking for a Variance for this site. We are changing the use from Single Family Residential to a Two-Family Residential Use by adding a Second Dwelling Unit. Our site meets the requirements set forth for all exemptions taken in LDC 25-2 Subchapter F – Article 3.3.

(See BOA Interpretation Addendum No. 2 – attached)

3. The interpretation will not grant a special privilege to one property inconsistent with other properties or uses similarly situated in that:

We are not asking for a special privilege to this property. If anyone, within the Subchapter F jurisdiction, can claim a Garage or a Porch exemption on a Second Dwelling Unit, then why is someone denied claiming a Basement exemption on a Second Dwelling Unit if all of these exemptions are written in the same Subarticle?

(See BOA Interpretation Addendum No. 3 – attached)

APPLICANT/AGGRIEVED PARTY CERTIFICATE – I affirm that my statements contained in the complete application are true and correct to the best of my knowledge and belief.

Signed _____ Printed Mark Vornberg, DC+A

Mailing Address 207 W. 4th Street

City, State & Zip Austin, TX 78701 Phone 512.472.4980

OWNER'S CERTIFICATE – I affirm that my statements contained in the complete application are true and correct to the best of my knowledge and belief.

Signed _____ Printed Tommy Siragusa

Mailing Address 2100 Travis Heights Boulevard

City, State & Zip Austin, TX 78704 Phone 512.426.5485

Tommy Siragusa & Angella Emmett
2100 Travis Hts Blvd
Austin, Texas 78704

Date: October 14, 2013

Subject: Letter of Authorization

We, the owners of 2100 Travis Hts. Blvd, here by give permission to **Dick Clark and Associates** to obtain permits and all necessary entitlements to construct a Second Dwelling Unit to our single-family residence.

Sincerely,

Tommy Siragusa

N

SUBJECT TRACT

ZONING BOUNDARY

CASE#: C15-2013-0121
LOCATION: 2100 Travis Heights Blvd.

CITY OF AUSTIN
FOUNDED 1839

This product is for informational purposes and may not have been prepared for or be suitable for legal, engineering, or surveying purposes. It does not represent an on-the-ground survey and represents only the approximate relative location of property boundaries.

This product has been produced by the Planning and Development Review Department for the sole purpose of geographic reference. No warranty is made by the City of Austin regarding specific accuracy or completeness.

DICK CLARK + ASSOCIATES
ARCHITECTURE · INTERIORS

Date: 10.15.13

To: City of Austin
Board of Adjustment
Planning and Development Review
505 Barton Springs Road
Austin, TX 78704

RE: Interpretation Application for 2100 Travis Heights Boulevard
Legal: Lot: 5 Block: 20 Subdivision: Travis Heights

Property Owners: Tommy Siragusa & Angella Emmett

Authorized Agent: Mark Vornberg, Dick Clark + Associates
207 W. 4th Street
Austin, TX 78701
512.472.4980

Dear Ms. Walker,

The Owners of 2100 Travis Heights Boulevard wish to add a Second Dwelling Unit to the rear of their lot. This is a common use in the neighborhood, including the neighbors on each side of the property.

Plan Review has approved other previous Second Dwelling Unit applications using the LDC 25-2 Subchapter F standards (commonly referred to as McMansion). Specifically, Subchapter F – Article 3.3 that dictates Gross Floor Area. We are not asking for a Variance for this site.

We respectfully request an Interpretation from the Board of Adjustments on whether the basement exemption laid forth in the LDC 25-2 Subchapter F – Article 3.3. is applicable to a Second Dwelling Unit.

Sincerely,

Mark Vornberg
Senior Associate / Authorized Agent
vornberg@dcarch.com

Tommy Siragusa & Angella Emmett
Owners / Applicants

SUPPORTING DOCUMENTS FOR 2100 TRAVIS HEIGHTS BOULEVARD

Date of Application: 10.16.13

From: Mark Vornberg, Dick Clark + Associates
207 W. 4th Street
Austin, TX 78701
512.472.4980

Project Name: 2100 Travis Heights Boulevard
Legal: Lot: 5 Block: 20 Subdivision: Travis Heights
File Number: 2013-082167 PR

BOA Interpretation Addendum No. 1

INTERPRETATION CONFLICT:
EXEMPTIONS ON SECOND DWELLING UNIT

A. This site is within the Applicability of the Subchapter F jurisdiction. Article 1.2.1.

B. Subchapter F standards supersede over LDC 25-2-774 Two-Family Residential. Article 1.2.2.

C. The exemptions in Article 1.3. do not include language that exempts Second Dwelling Units from the Subchapter F standards.

D. The definition of Gross Floor Area is modified by Subchapter F – Article 3.3 to include exemptions for Parking Areas, Porches, Basements and Attics.

E. The language written in LDC 25-2 Subchapter F then controls over the definition of Gross Floor Area including exemptions for Parking Areas, Porches, Basements and Attics.

F. We are not asking for a Variance to go over the 850 sq ft of Gross Floor Area restricted by LDC 25-2-774 Two-Family Residential. The definition of Gross Floor Area includes exemptions for Second Dwelling Units. Our Single-Story Second Dwelling Unit has a total of 807 sq. ft. and a Basement.

BELOW HAS REFERENCES TAKEN DIRECTLY FROM THE LAND DEVELOPMENT CODE.

A. LDC 25-2 Subchapter F – Article 1.2.1.

§ 1.2. APPLICABILITY.

Except as provided in Section *1.3*, this Subchapter applies to property that is:

1.2.1. Within the area bounded by:

A. Highway 183 from Loop 360 to Ben White Boulevard;

B. Ben White Boulevard from Highway 183 to South Interstate Highway 35;

C. South Interstate Highway 35 from Ben White Boulevard to William Cannon Drive;

D. William Cannon Drive from South Interstate Highway 35 to Manchaca Road;

E. Manchaca Road from William Cannon Drive to Ben White Boulevard;

F. Ben White Boulevard from Manchaca Road to Loop 360;

G. Loop 360 from Ben White Boulevard to Loop 1;

H. Loop 1 from Loop 360 to the Colorado River;

I. The Colorado River from Loop 1 to Loop 360; and

J. Loop 360 from the Colorado River to Highway 183; and

[***Click here to view Map***]

B. LDC 25-2 Subchapter F – Article 1.2.2.

1.2.2. Used for a:

A. Bed and breakfast (group 1) residential use;

B. Bed and breakfast (group 2) residential use;

C. Cottage special use;

D. Duplex residential use;

E. Secondary apartment special use;

F. Single-family attached residential use;

G. Single-family residential use;

H. Small lot single-family residential use;

I. Two-family residential use;

J. Urban home special use;

K. Club or lodge;

L. Daycare services (general and limited);

M. Family homes;

N. Group homes (general and limited);

O. Condo residential;

P. Retirement housing (small and large site); or

Q. Townhouse residential.

Source: Ord. 20060216-043; Ord. 20060309-058; Ord. 20060622-022; Ord. 20060928-022; Ord. 20080618-093; Ord. 20100805-051.

C. LDC 25-2 Subchapter F – Article 1.3.

§ 1.3. EXCEPTIONS.

1.3.1. This Subchapter does not apply to a lot zoned as a single-family residence small lot (SF-4A) district unless the lot is adjacent to property zoned as a single-family residence standard lot (SF-1), single-family residence standard lot (SF-2) district, or family residence (SF-3) district.

1.3.2. This Subchapter does not apply to the approximately 698.7 acres of land known as the Mueller Planned Unit Development, which was zoned as a planned unit development (PUD) district by Ordinance Number 040826-61.

1.3.3. This Subchapter does not apply to uses listed in subsections 1.2.2(K)-(Q) of Section *1.2* if an applicant has agreed, in a manner prescribed by the director, to comply with the requirements of Chapter 25-2, Article 10 (*Compatibility Standards*).

Source: Ord. 20060216-043; Ord. 20060309-058; Ord. 20060622-022; Ord. 20060928-022; Ord. 20080618-093.

D. LDC 25-2 Subchapter F – Article 3.3.

§ 25-1-21 DEFINITIONS.

(44) GROSS FLOOR AREA means the total enclosed area of all floors in a building with a clear height of more than six feet, measured to the outside surface of the exterior walls. The term includes loading docks and excludes atria airspace, parking facilities, driveways, and enclosed loading berths and off-street maneuvering areas.

§ 3.3. GROSS FLOOR AREA.

In this Subchapter, GROSS FLOOR AREA has the meaning assigned by Section 25-1-21 (*Definitions*), with the following modifications:

3.3.1. In this Subchapter, GROSS FLOOR AREA means all enclosed space, regardless of its dimensions, that is not exempted under subsections 3.3.2, 3.3.3, or 3.3.4.

3.3.2. Subject to the limitations in paragraph C below, the following parking areas and structures are excluded from gross floor area for purposes of this Subchapter:

A. Up to 450 square feet of:

1. A detached rear parking area that is separated from the principal structure by not less than 10 feet;

2. A rear parking area that is 10 feet or more from the principal structure, provided that the parking area is either:

a. detached from the principal structure; or

b. attached by a covered breezeway that is completely open on all sides, with a walkway not exceeding 6 feet in width and a roof not exceeding 8 feet in width; or

3. A parking area that is open on two or more sides, if:

i. it does not have habitable space above it; and

ii. the open sides are clear and unobstructed for at least 80% of the area measured below the top of the wall plate to the finished floor of the carport.

B. Up to 200 square feet of:

1. An attached parking area if it used to meet the minimum parking requirement; or

2. A garage that is less than 10 feet from the rear of the principal structure, provided that the garage is either:

a. detached from the principal structure; or

b. attached by a covered breezeway that is completely open on all sides, with a walkway not exceeding 6 feet in width and a roof not exceeding 8 feet in width.

C. An applicant may receive only one 450-square foot exemption per site under paragraph A. An applicant who receives a 450-square foot exemption may receive an additional 200-foot exemption for the same site under paragraph B, but only for an attached parking area used to meet minimum parking requirements.

3.3.3. Porches, basements, and attics that meet the following requirements shall be excluded from the calculation of gross floor area:

A. A ground floor porch, including a screened porch, provided that:

1. the porch is not accessible by automobile and is not connected to a driveway; and

2. the exemption may not exceed 200 square feet if a porch has habitable space or a balcony above it.

B. A habitable portion of a building that is below grade if:

1. The habitable portion does not extend beyond the first-story footprint and is:

a. Below natural or finished grade, whichever is lower; and

b. Surrounded by natural grade for at least 50% of its perimeter wall area, if the habitable portion is required to be below natural grade under paragraph 1.a.

2. The finished floor of the first story is not more than three feet above the average elevation at the intersections of the minimum front yard setback line and the side property lines.

C. A habitable portion of an attic, if:

1. The roof above it is not a flat or mansard roof and has a slope of 3 to 12 or greater;

2. It is fully contained within the roof structure;

3. It has only one floor;

4. It does not extend beyond the footprint of the floors below;

5. It is the highest habitable portion of the building, or a section of the building, and adds no additional mass to the structure; and

6. Fifty percent or more of the area has a ceiling height of seven feet or less.

3.3.4. An enclosed area shall be excluded from the calculation of gross floor area if it is five feet or less in height. For purposes of this subsection:

A. Area is measured on the outside surface of the exterior walls; and

B. Height is measured from the finished floor elevation, up to either:

1. the underside of the roof rafters; or

2. the bottom of the top chord of the roof truss, but not to collar ties, ceiling joists, or any type of furred-down ceiling.

3.3.5. An area with a ceiling height greater than 15 feet is counted twice.

Source: Ord. 20060216-043; Ord. 20060309-058; Ord. 20060622-022; Ord. 20060928-022; Ord. 20080618-093; Ord. 20130425-105.

E: LDC 25-2-774 Two-Family Residential Use.

§ 25-2-774 TWO-FAMILY RESIDENTIAL USE.

(A) For a two-family residential use, the base zoning district regulations are superseded by the requirements of this section.

(B) For a two-family residential use the minimum lot area is 7,000 square feet.

(C) The second dwelling unit:

(1) must be contained in a structure other than the principal structure;

(2) must be located:

(a) at least 15 feet to the rear of the principal structure; or

(b) above a detached garage;

(3) may be connected to the principal structure by a covered walkway;

(4) may not have an entrance within 10 feet of a lot line;

(5) unless the second dwelling unit has vehicular access from a rear alley, it must be served by a paved driveway, and the portion of the driveway that crosses the front yard must be at least 9 feet and not more than 12 feet wide;

(6) may not exceed a height of 30 feet, and is limited to two stories; and

(7) may not exceed a gross floor area of:

(a) 850 total square feet; or

(b) 550 square feet on the second story, if any.

(D) Impervious cover for the site may not exceed 45 percent.

(E) Building cover for the site may not exceed 40 percent.

(F) Other than in a driveway, parking is prohibited in the front yard.

Source: Section 13-2-255; Ord. 990225-70; Ord. 000511-108; Ord. 000831-65; Ord. 031211-11; Ord. 041118-59.

BOA Interpretation Addendum No. 2

INTERPRETATION CONFLICT:
EXEMPTIONS ON SECOND DWELLING UNIT

We are not asking the city to do anything new or different. We are not asking for a Variance for this site. We are changing the use from Single Family Residential to a Two-Family Residential Use by adding a Second Dwelling Unit.

Our site meets the requirements set forth for all exemptions taken below in LDC 25-2 Subchapter F – Article 3.3.

The ground floor porch is

1. Not accessible by automobile and is not connected to a driveway
2. The exemption taken does not exceed 200 sq. ft.

The habitable portion of our building is below grade because:

1. It does not extend beyond the First-Story footprint
    a. It is below the natural or finished grade (whichever is lower)
    b. It is surrounded by natural grade for at least 50% of its perimeter wall.
2. The finish floor of the first floor is not more than 3' above the average elevation at the intersections of the minimum front yard setback and the side property lines.

BOA Interpretation Addendum No. 3

INTERPRETATION CONFLICT:
EXEMPTIONS ON SECOND DWELLING UNIT

Plan Review has approved other Second Dwelling Unit applications using the Subchapter F standards. Specifically Subchapter F – Article 3.3 that allows exemptions to Gross Floor Area. Explicitly, they have allowed exemptions for Parking Areas and Porches. Article 3.3.3 includes the language for both Porches and Basement exemptions together within the same Subarticle.

Taken from the LDC 25-2 Subchapter F – Article 3.3.3:

"3.3.3. Porches, basements, and attics that meet the following requirements shall be excluded from the calculation of gross floor area:

A. A ground floor porch, including a screened porch, provided that:
   1. the porch is not accessible by automobile and is not connected to a driveway; and
   2. the exemption may not exceed 200 square feet if a porch has habitable space or a balcony above it.

B. A habitable portion of a building that is below grade if:
   1. The habitable portion does not extend beyond the first-story footprint and is:
      a. Below natural or finished grade, whichever is lower; and
      b. Surrounded by natural grade for at least 50% of its perimeter wall area, if the habitable portion is required to be below natural grade under paragraph 1.a.
   2. The finished floor of the first story is not more than three feet above the average elevation at the intersections of the minimum front yard setback line and the side property lines."

If anyone, within the Subchapter F jurisdiction, can claim a Garage or a Porch exemption on a Second Dwelling Unit, then why is someone denied claiming a Basement exemption on a Second Dwelling Unit if they are written within the same Subarticle?

We are not asking the city for a special privilege to this property. Our site is located currently a Single Family Residence in the middle of multiple neighbors with Two-Family Residential.

DICK CLARK + ASSOCIATES
ARCHITECTURE · INTERIORS

With what is written in the Land Development Code, and described above, this Single-Story Second Dwelling Unit is designed within regulations set forth by the Land Development Code that governs the Gross Floor Area calculations over a wide area of the City of Austin.

Sincerely,

Mark Vornberg
Senior Associate
vornberg@dcarch.com

IMPERVIOUS COVER

SITE AREA:		7,035 SQ FT
ALLOWABLE BUILDING COVER:	(40.0%):	2,814 SQ FT
EXISTING BUILDING COVER:	(22.3%):	1,569 SQ FT
NEW ADDITION BUILDING COVER:	(13.8%):	967 SQ FT
TOTAL PROPOSED BUILDING COVER:	(36.1%):	2,536 SQ FT
ALLOWABLE IMPERVIOUS COVER:	(45.0%):	3,166 SQ FT
EXISTING IMPERVIOUS COVER:	(30.1%):	2,117 SQ FT
NEW ADDITION IMPERVIOUS COVER:	(14.7%):	1,036 SQ FT
TOTAL PROPOSED IMPERVIOUS COVER:	(44.8%):	3,153 SQ FT

F.A.R. CALCULATIONS

EXISTING HOUSE:		1,128 SQ FT	
APARTMENT:		807 SQ FT	
PORCH:	(EXEMPTION)	481 SQ FT	(-200 SQ FT)
BASEMENT:	(EXEMPT)	556 SQ FT	(-556 SQ FT)
GARAGE:	(EXEMPTION)	347 SQ FT	(-200 SQ FT)
TOTAL PROPOSED:		2,363 SQ FT	(0.336)
TOTAL ALLOWED:		2,814 SQ FT	(0.400)

BUILDING COVER BREAKDOWN:

EXISTING HOUSE:	1,128 SQ FT
APARTMENT:	807 SQ FT
COVERED PARKING/GARAGE:	347 SQ FT
EXISTING PATIO (COVERED):	94 SQ FT
EXISTING DECK:	-
NEW PATIO:	160 SQ FT
NEW DECK:	-
BALCONY:	-

SITE BREAKDOWN:

EXIST. DRIVEWAY:	397 SQ FT
NEW DRIVEWAY:	11 SQ FT
NEW STAIR:	30 SQ FT
EXIST. UNCOVERED PATIO:	18 SQ FT
NEW UNCOVERED PATIO:	6 SQ FT
EXIST. UNCOVERED DECKS @ 50%:	-
NEW UNCOVERED DECK @ 50%:	-
AC PADS:	9 SQ FT
EXIST. RETAINING WALLS/PLANTERS:	113 SQ FT
NEW RETAINING WALLS/PLANTERS:	33 SQ FT

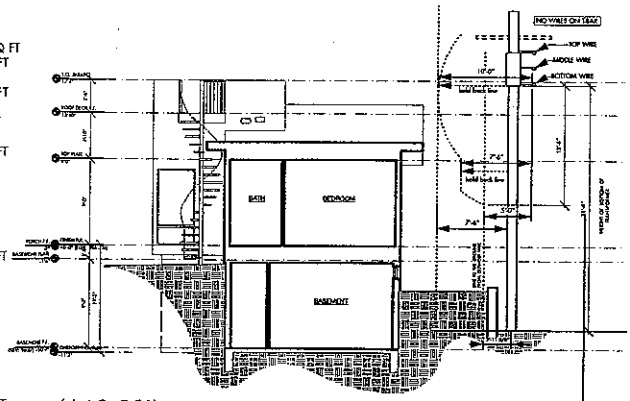

2 SITE SECTION
Scale: 3/32" = 1'-0"

FRONT YARD IMP. COVER CALC.:	
FRONT YARD AREA:	1250 SQ FT
PLANTERS & RETAINING:	27 SQ FT
DRIVEWAY:	301 SQ FT
TOTAL F.Y. IMPERVIOUS:	328 SQ FT (26.2%)

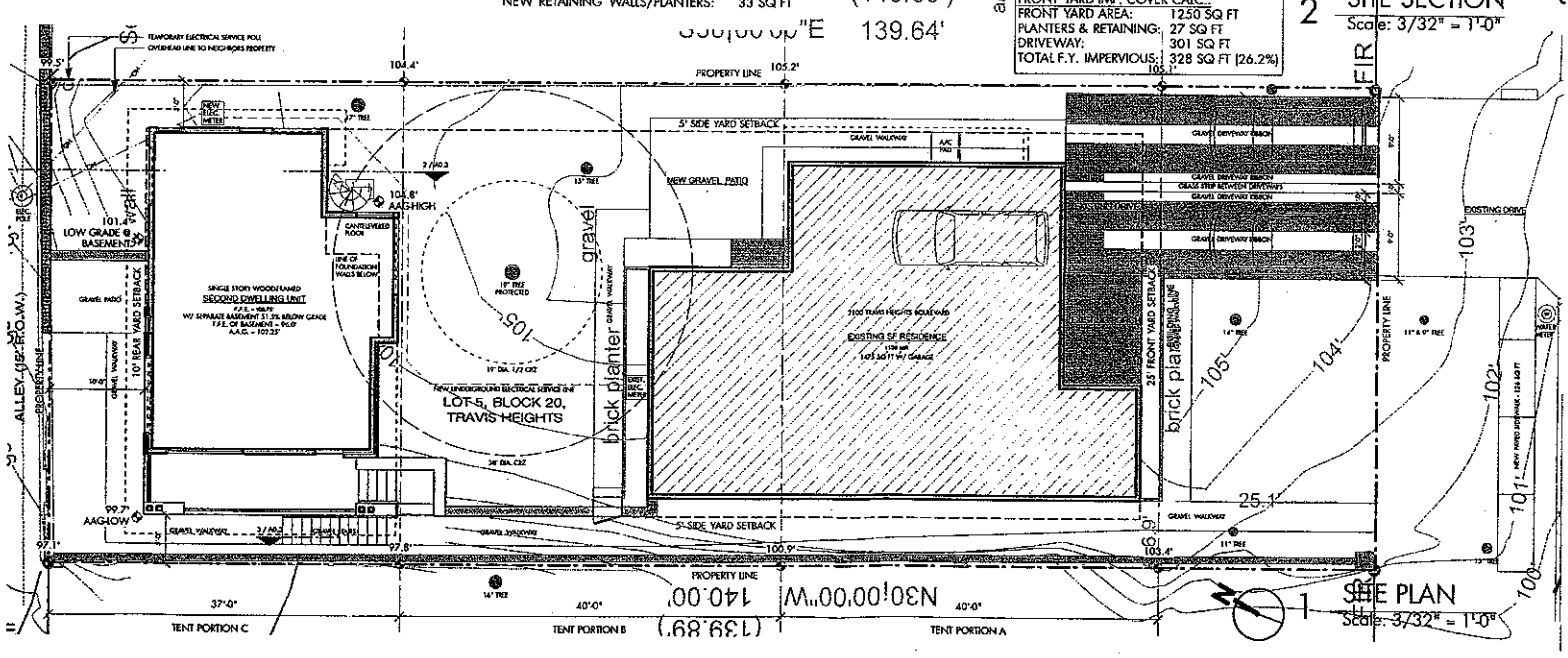

1 SITE PLAN
Scale: 3/32" = 1'-0"

ADDRESS:
2100 TRAVIS HEIGHTS BOULEVARD
AUSTIN, TEXAS 78704

LEGAL DESCRIPTION:
LOT5, BLOCK 20, TRAVIS HEIGHTS, A SUBDIVISION IN TRAVIS COUNTY, TEXAS, ACCORDING TO THE MAP OR PLAT OF RECORD IN BOOK3, PAGE 15, PLAT RECORDS OF TRAVIS COUNTY, TEXAS.

T1 12" Spanish Oak
T2 13" Hackberry
T3 17" Pecan
T4 16" Cedar
T5 19" pecan
T6 15" Pecan
T7 16", 13", 12" & 11" Cedar
T8 11" Pecan
T9 14" Pecan
T10 13" Pecan
T11 10" pecan
T12 11" & 9" Pecan
T13 13" Pecan

SCALE
1" = 20'

LEGEND

1/2" FOUND IRON ROD	FIR
1/2" FOUND IRON PIPE	FIP
UTILITY LINE	
WOOD FENCE	
CHAIN LINK FENCE	

NOTE:
THIS SURVEY WAS PERFORMED WITHOUT THE BENEFIT OF A TITLE COMMITMENT AND OTHER RIGHTS AND RESTRICTIONS MAY APPLY.

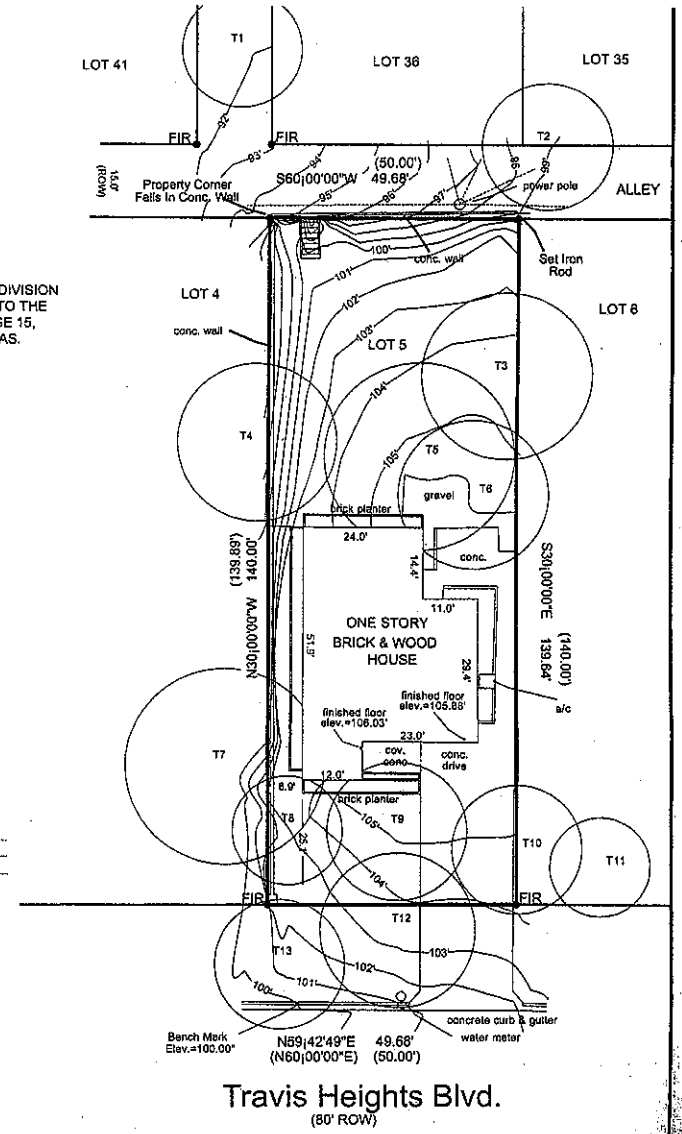

State of Texas:
County of Travis:

The undersigned does hereby certify that this survey was this day made on the property legally described hereon and is correct, and this survey substantially complies with the current Texas Society of Professional Surveyors Standards and Specifications for a Category ____ Condition II Survey.

And I certify that the property shown hereon ____IS NOT____ within a special flood hazard area as identified by the Federal Insurance Adm. Department of HUD Flood hazard boundary map revised as per Map Number: ____48453C0605H____
Zone: ____X____ Dated: ____9/26/2008____

Dated this the ____24th____ day of ____JUNE____, 2013 .

Thomas P. Dixon R.P.L.S. 4324

©Copyright 2013

P.O. Box 160176, Austin, Texas 78716-0176 Phone: 481-9602

EXISTING SURVEY
Scale: 1" = 20'-0"

A0.1a

SHEET TITLE: EXISTING SURVEY
SHEET

REVISIONS

PRELIMINARY NOT FOR CONSTRUCTION OR PERMITTING

2100 TRAVIS HEIGHTS
2100 TRAVIS HEIGHTS BOULEVARD
AUSTIN TX, 78704

PROJECT

DATE 09.24.13

SHEET

B1
18

MEMORANDUM

TO: Board of Adjustment

FROM: Daniel Word, Principal Planner, Residential Review Division

DATE: December 10, 2013

SUBJECT: Appeal of Building Official's Interpretation Regarding 2100 Travis Heights

Case Summary
The appellant submitted a Residential Permit Application to Residential Review staff on or about August 7, 2013, proposing to construct a new detached dwelling unit to the rear of an existing single-family residence to create a two-family residential use. The application was reviewed and rejected on or about August 12th for multiple reasons (Attachment A), including notification to the applicant that the project as proposed did not comply with LDC 25-2-774 (C) (7), which limits the size of the second dwelling unit. The applicant is appealing this particular decision to the Board of Adjustment for an interpretation.

Arguments
The appellant makes an argument favoring the approval of the proposed design, asserting that the incorrect definition of gross floor area is being applied to the second dwelling unit.

The appellant references LDC 25-2 Subchapter F Article 3.3 for the definition of gross floor area, noting that it modifies the definition of gross floor area found in LDC 25-1-21 (44) and has applied the Article 3.3 language to the design proposed. The appellant also notes compliance with the "porch exclusion" and "basement exclusion" found in Article 3.3.3 (A) and Article 3.3.3 (B) respectively and claims that PDRD has permitted other second dwelling units using the Subchapter F standards for gross floor area, specifically citing the parking and porch exclusions.

Staff has consistently applied the LDC 25-1-21 definition of gross floor area to the limitations established in LDC 25-2-774. Porches and parking areas would not be calculated as gross floor area under the LDC 25-1-21 definition, as porches are not "enclosed" and parking facilities are specifically excluded by the code language, whereas a basement is "enclosed" and would count as gross floor area.

Staff Interpretation
Staff believes that for purposes of calculating gross floor area of a building, the LDC 25-1-21 definition should be the appropriate definition applied in relation to the 850 square foot limitation of LDC 25-2-774. Under LDC 25-2 Subchapter F Article 2.1, the maximum development permitted on a property subject to Subchapter F is limited to the greater of 0.4 to 1 FAR or 2300 square feet. Staff views this as

guidance that the Article 3.3 definition should be used when calculating the overall FAR of a site, but not necessarily for the calculation of gross floor area of a particular building.

The term "gross floor area" is used in many areas of the Austin City Code, including but not limited to the Sidewalk Ordinance (Attachment B) and the "Super Duplex" Ordinance (Attachment C). Applying the Article 3.3 definition to other areas of the Austin City Code outside of LDC 25-2 Subchapter F would create a situation where the outcome of a determination as to whether a particular development requires a landscaping plan, or the installation of a sidewalk would differ depending on whether the development is located inside or outside of the Subchapter F boundaries. Staff believes it would create an inequitable situation for similar uses with similar circumstances to have these determinations tied to a location.

Additionally, *Two-family Residential Use* has existed with the site development regulation limiting the size of the second dwelling unit since May 22, 2000, more than 6 years prior to the adoption of the "McMansion" Ordinance (aka Subchapter F). The 850 square foot limitation was later modified on November 18, 2004 to further restrict the overall size of the building to limit the 2nd story to 550 square feet (if any). Taking the interpretation of the appellant would have the effect of allowing the second dwelling unit to become as large as 1700 square feet (or more) if the Subchapter F exclusions were to be applied to individual buildings, which would seem to directly conflict with the perceived intention to limit the overall size of the second dwelling unit.

In this scenario, a permit request has been denied by the building official and the appellant retains the option of pursuing a variance. Staff respectfully requests the board uphold the decision of the building official.

For your consideration,

Daniel Word
Principal Planner, Residential Review Division
Planning and Development Review Department

Attachment A: Comment Report dated August 12, 2013
Attachment B: Ordinance #20080214-096
Attachment C: Ordinance #030605-49

A1/20

Austin City Code References

25-1-21 (44)

GROSS FLOOR AREA means the total enclosed area of all floors in a building with a clear height of more than six feet, measured to the outside surface of the exterior walls. The term includes loading docks and excludes atria airspace, parking facilities, driveways, and enclosed loading berths and off-street maneuvering areas.

25-2-774

(A) For a two-family residential use, the base zoning district regulations are superseded by the requirements of this section.

(B) For a two-family residential use the minimum lot area is 7,000 square feet.

(C) The second dwelling unit:

(1) must be contained in a structure other than the principal structure;

(2) must be located:

(a) at least 15 feet to the rear of the principal structure; or

(b) above a detached garage;

(3) may be connected to the principal structure by a covered walkway;

(4) may not have an entrance within 10 feet of a lot line;

(5) unless the second dwelling unit has vehicular access from a rear alley, it must be served by a paved driveway, and the portion of the driveway that crosses the front yard must be at least 9 feet and not more than 12 feet wide;

(6) may not exceed a height of 30 feet, and is limited to two stories; and

(7) may not exceed a gross floor area of:

(a) 850 total square feet; or

(b) 550 square feet on the second story, if any.

(D) Impervious cover for the site may not exceed 45 percent.

(E) Building cover for the site may not exceed 40 percent.

(F) Other than in a driveway, parking is prohibited in the front yard.

25-2 Subchapter F Article 2.1

The maximum amount of development permitted on a property subject to this Subchapter is limited to the greater of 0.4 to 1.0 floor-to-area ratio or 2,300 square feet of gross floor area, as defined in Section 3.3. Floor-to-area ratio shall be measured using gross floor area as defined in Section 3.3 , except that the lot area of a flag lot is calculated consistent with the requirements of Section 25-1-22 (*Measurements*).

25-2 Subchapter F Article 3.3

In this Subchapter, GROSS FLOOR AREA has the meaning assigned by Section 25-1-21 (*Definitions*), with the following modifications:

3.3.1. In this Subchapter, GROSS FLOOR AREA means all enclosed space, regardless of its dimensions, that is not exempted under subsections 3.3.2, 3.3.3, or 3.3.4.

3.3.2. Subject to the limitations in paragraph C below, the following parking areas and structures are excluded from gross floor area for purposes of this Subchapter:

A. Up to 450 square feet of:

A1/21

1. A detached rear parking area that is separated from the principal structure by not less than 10 feet;

2. A rear parking area that is 10 feet or more from the principal structure, provided that the parking area is either:

a. detached from the principal structure; or

b. attached by a covered breezeway that is completely open on all sides, with a walkway not exceeding 6 feet in width and a roof not exceeding 8 feet in width; or

3. A parking area that is open on two or more sides, if:

i. it does not have habitable space above it; and

ii. the open sides are clear and unobstructed for at least 80% of the area measured below the top of the wall plate to the finished floor of the carport.

B. Up to 200 square feet of:

1. An attached parking area if it used to meet the minimum parking requirement; or

2. A garage that is less than 10 feet from the rear of the principal structure, provided that the garage is either:

a. detached from the principal structure; or

b. attached by a covered breezeway that is completely open on all sides, with a walkway not exceeding 6 feet in width and a roof not exceeding 8 feet in width.

C. An applicant may receive only one 450-square foot exemption per site under paragraph A. An applicant who receives a 450-square foot exemption may receive an additional 200-foot exemption for the same site under paragraph B, but only for an attached parking area used to meet minimum parking requirements.

3.3.3. Porches, basements, and attics that meet the following requirements shall be excluded from the calculation of gross floor area:

A. A ground floor porch, including a screened porch, provided that:

1. the porch is not accessible by automobile and is not connected to a driveway; and

2. the exemption may not exceed 200 square feet if a porch has habitable space or a balcony above it.

B. A habitable portion of a building that is below grade if:

1. The habitable portion does not extend beyond the first-story footprint and is:

a. Below natural or finished grade, whichever is lower; and

b. Surrounded by natural grade for at least 50% of its perimeter wall area, if the habitable portion is required to be below natural grade under paragraph 1.a.

2. The finished floor of the first story is not more than three feet above the average elevation at the intersections of the minimum front yard setback line and the side property lines.

<u>25-6-353 (A)</u>

This section applies to:

(1) a building permit for construction of:

(a) a new building; or

(b) an addition to an existing building that increases the building's gross floor area by 50 percent or more; or (2) a relocation permit to move a building from one site to another.

Project Name: 2100 TRAVIS HEIGHTS BLVD
Legal: Lot: 5 Block: Subdivision:
File Number: 2013-082167 PR

Attachment "A"

A1/22

Residential Zoning Review - Paul Yadro - 512-974-3553

I have reviewed the above noted application and have the following comments that must be addressed before a permit will be released:

1. Application for second dwelling unit will be reviewed under LDC 25-2-774. Property is zoned SF-3-NP and is 7,000sf or greater. Note: South River City NP did not adopt Secondary Apartments.
2. As submitted your proposed development does not comply with LDC 25-2-774 – You have more than 850sf of gross floor area. McMansion exemptions for basements, attics, etc. do not exempt from the 850sf maximum allowed gross floor area for a second dwelling unit. You have 807sf of gfa on the first floor, ~312sf of enclosed area labeled carport storage (which an automobile cannot park in), and 254sf of area labeled basement. The carport/parking area is not counted (as was correctly done); however, the other 312sf + 254sf count towards the total gfa of the second dwelling unit. Substantial revisions will be required.
3. Include the square footages of the porch and the carport (actual parking area) on the floor plans and include the ceiling heights of all rooms and areas on the floor plans.
4. Include a roof deck floor plan with its square footage on it. This area will require inspections and must be included on the plans and application.
5. Provide separate exhibits for the basement exemption that demonstrate compliance with 25-2-Sub-Chapter F.3.3.3.B.; specifically, 3.3.3.B.2.
6. Depict the top plate of the basement/carport on the elevations.
7. The values provided on Page 2 and Page 3 of the application does not add up. On Page 3, you have entered 1283sf of Accessory Building, while on Page 2 you only have 807sf of 1st floor area and 254sf of basement.
8. The values entered on the application should match up and be in agreement with what has been provided on the plans.
9. Driveway runners/ribbons as proposed do not comply. The min. width for the tire strips is 3 feet and 2 feet of pervious surface in between the 3 feet wide impervious tire strips.
10. Contact Samuel West at 512-974-8775 for approval of proposed alley access and driveway design from the public alley.
11. Staff suggests requesting a meeting with your Zoning Reviewer prior to any submittal of updates.
12. Plans will not be routed to Technical Review until Zoning Review comments have been addressed.
13. Staff will hold the plans and application as submitted in our office. If you have questions regarding the comments or would like to make an appointment with the Plan Reviewer, please contact Paul Yadro at Paul.Yadro@austintexas.gov or via phone at 512-974-3553.

Attachment "B"

A1
23

ORDINANCE NO. 20080214-096

AN ORDINANCE AMENDING CHAPTER 25-6 OF THE CITY CODE RELATING TO SIDEWALKS.

BE IT ORDAINED BY THE CITY COUNCIL OF THE CITY OF AUSTIN:

PART 1. Section 25-6-351 *(Sidewalk Installation In Subdivisions)* of the City Code is amended to amend Subsections (B) and (D) to read:

(B) The director [~~Land Use Commission~~] may waive the requirement to install a sidewalk based on criteria in the Transportation Criteria Manual.

(D) Except as provided in Section 25-6-354 *(Payment Instead Of Sidewalk Installation)*, the [~~The~~] accountable official may not issue a certificate of occupancy or certificate of compliance until a sidewalk required under this division is installed.

PART 2. Section 25-6-352 *(Sidewalk Installation With Site Plans)* of the City Code is amended to add Subsection (C) to read:

(C) Except as provided in Section 25-6-354 *(Payment Instead Of Sidewalk Installation)*, the accountable official may not issue a certificate of occupancy or certificate of compliance until a sidewalk required under this division is installed.

PART 3. Chapter 25-6 *(Transportation)* of the City Code is amended to add Sections 25-6-353 and 25-6-354 to read:

§ 25-6-353 SIDEWALK INSTALLATION WITH BUILDING OR RELOCATION PERMIT.

(A) This section applies to:

(1) a building permit for construction of:

(a) a new building; or

(b) an addition to an existing building that increases the building's gross floor area by 50 percent or more; or

(2) a relocation permit to move a building from one site to another.

A1, 24

(B) Except as provided in Section 25-6-354 *(Payment Instead Of Sidewalk Installation)* and Subsections (C) and (D):

(1) the building official may not approve a building or relocation permit unless sidewalks are shown on the plot plan or site plan, as applicable, if required by the Transportation Criteria Manual; and

(2) the building official may not issue a certificate of occupancy until a sidewalk required under this division is installed.

(C) The director may waive the requirement to install a sidewalk:

(1) based on criteria in the Transportation Criteria Manual; or

(2) if the director determines that the development does not generate pedestrian traffic for the sidewalk.

(D) Unless otherwise required by Section 25-6-351 *(Sidewalk Installation In Subdivisions)* or Section 25-6-352 *(Sidewalk Installation With Site Plans)*, a sidewalk for a corner lot is required only along the street with the shortest lot frontage.

§ 25-6-354 PAYMENT INSTEAD OF SIDEWALK INSTALLATION.

(A) An applicant may request to pay a fee instead of installing a sidewalk by filing a written request at the time the person submits a permit application in the manner prescribed by the director. An applicant who has not filed a request at the time of application, may later amend the application to request to pay fee instead of installing a sidewalk.

(B) For a sidewalk required under Section 25-6-353 (*Sidewalk Installation with Building or Relocation Permit*), the director shall approve payment of a fee instead of installation of a sidewalk if the director determines that:

(1) the property is used only for a residential use and has not more than two dwelling units;

(2) on the date the property was subdivided, the land development regulations did not include a sidewalk requirement; and

(3) less than 50 percent of the block face on which the property is located has a sidewalk.

(C) For a sidewalk required under Section 25-6-351 (*Sidewalk Installation in Subdivisions*), the director shall approve payment of a fee instead of installation of a sidewalk if the subdivision:

A1
25

(1) consists of five or fewer lots;

(2) only includes residential lots, each of which contains no more than two dwelling units;

(3) is a resubdivision of land that was originally subdivided on a date when applicable regulations did not include a sidewalk requirement; and

(4) less than 50 percent of the block face on which the property is located has a sidewalk.

(D) The director may approve payment of a fee instead of installation of a sidewalk if the director determines that installation is impractical because:

(1) there are no sidewalks in the vicinity, and it is unlikely that there will be development nearby that would require the installation of sidewalks;

(2) installation of the sidewalk would require the removal of a protected tree or other major obstruction within the right-of-way;

(3) a stormwater drainage ditch or similar public utility facility prevents the installation of the sidewalk, and neither the sidewalk nor the facility can be reasonably relocated to accommodate both the sidewalk and the facility;

(4) the topography would require the construction of a retaining wall more than two feet high to accommodate the sidewalk; or

(5) other unusual circumstances make the sidewalk installation requirement unreasonable or inappropriate.

(E) In making a determination under Subsection (D), the director shall give primary consideration to the following:

(1) the adopted neighborhood plan;

(2) information provided by the neighborhood planning team;

(3) information provided by a registered neighborhood association; and

(4) the approved City sidewalk plan.

(F) The amount of the fee is the current sidewalk installation cost, as determined in accordance with the Transportation Criteria Manual.

(G) A fee paid under this section must be used to install a sidewalk or curb ramp in the same service area, as established by the Transportation Criteria Manual.

H
26

(H) The City may refund the fee to the applicant if it is not spent within 10 years of the date of its collection.

PART 4. This ordinance takes effect on February 25, 2008.

PASSED AND APPROVED

February 14, 2008 § Will Wynn
Mayor

APPROVED: David Allan Smith
City Attorney

ATTEST: Shirley A. Gentry
City Clerk

Attachment "C"

#27

ORDINANCE NO. 030605-49

AN ORDINANCE AMENDING SECTIONS 25-2-511, 25-2-555, AND 25-2-981 OF THE CITY CODE AND REPEALING AND REPLACING SECTION 25-2-773 OF THE CITY CODE RELATING TO DUPLEX RESIDENTIAL USE; REPEALING ORDINANCE NUMBER 030227-28 AS AMENDED BY ORDINANCE NUMBER 030522-15; AND DECLARING AN EMERGENCY.

BE IT ORDAINED BY THE CITY COUNCIL OF THE CITY OF AUSTIN:

PART 1. Section 25-2-511(A) of the City Code is amended to read as follows:

(A) Notwithstanding any other provision of this code, except [~~Except~~] as provided in Subsection (B):[~~,~~]

(1) not more than six unrelated persons may reside in a dwelling unit; and

(2) not more than three unrelated persons 18 years of age or older may reside in a dwelling unit of a duplex residential use, unless:

(a) before June 5, 2003:

(i) a building permit for the duplex structure was issued; or

(ii) the use was established; and

(b) after June 5, 2003 the gross floor area and the number of bedrooms in the duplex structure did not increase, except for the completion of construction authorized before that date.

PART 2. Section 25-2-555 of the City Code is amended to add a new Subsection (D) to read as follows:

(D) This subsection applies to a duplex residential use.

(1) On a lot with a lot area of less than 10,000 square feet, a duplex structure may not exceed 4,000 square feet of gross floor area or contain more than six bedrooms.

(2) On a lot with a lot area of 10,000 square feet or more, a duplex structure may not exceed a floor-to-area ratio of 0.57 to 1.

PART 3. Section 25-2-773 of the City Code is repealed and replaced by a new Section 25-2-773 to read as follows:

§ 25-2-773 DUPLEX RESIDENTIAL USE.

(A) For a duplex residential use, the base zoning district regulations are superseded by the requirements of this section.

(B) For a duplex residential use:

(1) minimum lot area is 7,000 square feet;

(2) minimum lot width is 50 feet;

(3) maximum building cover is 40 percent;

(4) maximum impervious cover is 45 percent; and

(5) maximum building height is the lesser of:

(a) 30 feet; or

(b) two stories.

(C) Except as provided in Subsection (D), four parking spaces are required for a duplex residential use.

(D) For a duplex that exceeds 4,000 square feet of gross floor area or has more than six bedrooms, the number of parking spaces required is the greater of:

(1) four; or

(2) one space for each bedroom.

(E) Not more than one required parking space may be located behind another required parking space.

PART 4. Section 25-2-981(B) of the City Code is amended to read as follows:

(B) This article does not apply to:

(1) property zoned central business district or downtown mixed use district;

(2) a lot containing one single-family residence;

(3) a lot containing one duplex residence, unless the residence exceeds 4,000 square feet of gross floor area or has more than six bedrooms [~~with fewer than six bedrooms~~];

(4) a two-family residential use;

(5) a secondary apartment special use;

(6) substantial restoration of a building within one year after the building is damaged;

(7) restoration of a building with a historic designation; or

(8) interior or facade remodeling, if the front and side exterior walls of the building remain in the same location.

PART 5. Ordinance Number 030227-28 as amended by Ordinance Number 030522-15 is repealed.

PART 6. The Council waives the requirements of Sections 2-2-3 and 2-2-7 of the City Code for this ordinance.

PART 7. The Council finds that the regulations in this ordinance are necessary to ensure that a duplex residential use is not established unless it is compatible with other nearby land uses. Because of this emergency, this ordinance takes effect immediately on its passage for the immediate preservation of the public peace, health, and safety.

PASSED AND APPROVED

June 5, 2003 § Gustavo L. Garcia
Gustavo L. Garcia
Mayor

APPROVED: Sedora Jefferson
City Attorney

ATTEST: Shirley A. Brown
City Clerk

Exemption Examples:

2013	Attic	1710 E 18th St	2013-077584 PR
	Attic	1403 Walnut Ave	2013-098290 PR
2012	Attic	2208 Townes Ln	2012-062812 PR
2011	Attic	3711 Windsor Rd	2011-029218 PR
	Attic	1919 Pasadena Dr	2011-058608 PR
2010	Attic	4212 Ramsey Ave	2010-104084 PR
2009	Attic	811 W 30th St	2009-013608 PR
2008	Basement	11909 Rotherham Dr	2008-074968 PR

(basement applied to accessory building)

IMPERVIOUS COVER

SITE AREA:		7,035 SQ FT
ALLOWABLE BUILDING COVER:	(40.0%):	2,814 SQ FT
EXISTING BUILDING COVER:	(22.3%):	1,569 SQ FT
NEW ADDITION BUILDING COVER:	(13.8%):	967 SQ FT
TOTAL PROPOSED BUILDING COVER:	(36.1%):	2,536 SQ FT
ALLOWABLE IMPERVIOUS COVER:	(45.0%):	3,166 SQ FT
EXISTING IMPERVIOUS COVER:	(30.1%):	2,117 SQ FT
NEW ADDITION IMPERVIOUS COVER:	(14.7%):	1,036 SQ FT
TOTAL PROPOSED IMPERVIOUS COVER:	(44.8%):	3,153 SQ FT

F.A.R. CALCULATIONS

EXISTING HOUSE:		1,128 SQ FT	
APARTMENT:		807 SQ FT	
PORCH:	(EXEMPTION)	481 SQ FT	(-200 SQ FT)
BASEMENT:	(EXEMPT)	556 SQ FT	(-556 SQ FT)
GARAGE:	(EXEMPTION)	347 SQ FT	(-200 SQ FT)
TOTAL PROPOSED:		2,363 SQ FT	(0.336)
TOTAL ALLOWED:		2,814 SQ FT	(0.400)

BUILDING COVER BREAKDOWN:

EXISTING HOUSE:	1,128 SQ FT
APARTMENT:	807 SQ FT
COVERED PARKING/GARAGE:	347 SQ FT
EXISTING PATIO (COVERED):	94 SQ FT
EXISTING DECK:	-
NEW PATIO:	160 SQ FT
NEW DECK:	-
BALCONY:	-

SITE BREAKDOWN:

EXIST. DRIVEWAY:	397 SQ FT
NEW DRIVEWAY:	11 SQ FT
NEW STAIR:	30 SQ FT
EXIST. UNCOVERED PATIO:	18 SQ FT
NEW UNCOVERED PATIO:	6 SQ FT
EXIST. UNCOVERED DECKS @ 50%:	-
NEW UNCOVERED DECK @ 50%:	-
AC PADS:	9 SQ FT
EXIST. RETAINING WALLS/PLANTERS:	113 SQ FT
NEW RETAINING WALLS/PLANTERS:	33 SQ FT

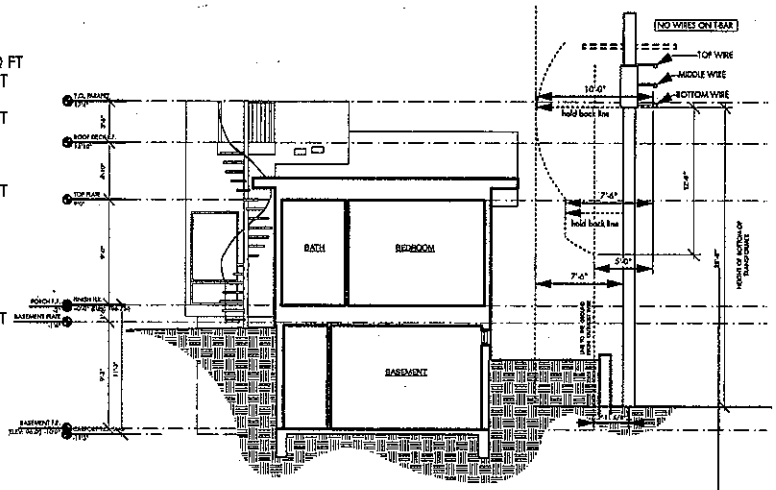

2 SITE SECTION
Scale: 3/32" = 1'-0"

FRONT YARD IMP. COVER CALC.:

FRONT YARD AREA:	1250 SQ FT
PLANTERS & RETAINING:	27 SQ FT
DRIVEWAY:	301 SQ FT
TOTAL F.Y. IMPERVIOUS:	328 SQ FT (26.2%)

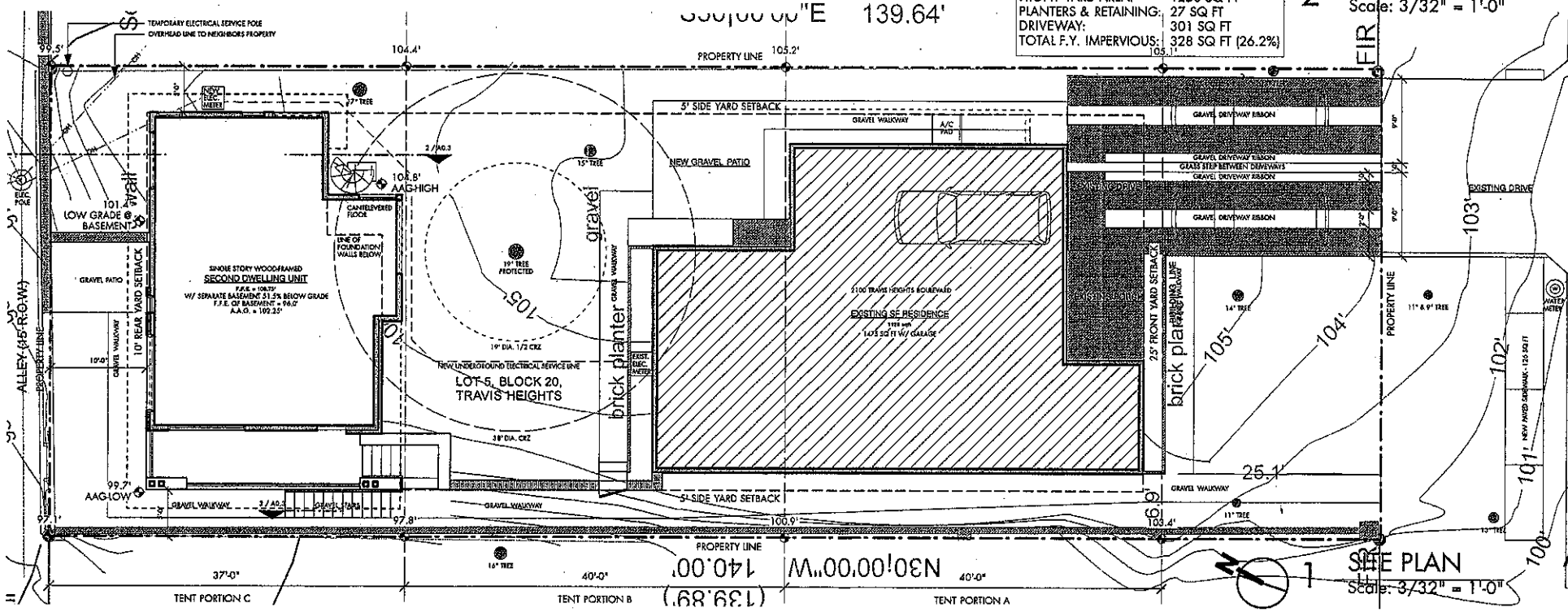

1 SITE PLAN
Scale: 3/32" = 1'-0"

DICK CLARK + ASSOCIATES
ARCHITECTURE · INTERIORS

SEAL

ISSUE
12_COA PERMIT REV1
13_COA PERMIT REV2

TRAVIS HEIGHTS BOULEVARD (80' R.O.W.)

2100 TRAVIS HEIGHTS
2100 TRAVIS HEIGHTS BOULEVARD
AUSTIN TX, 78704

SHEET TITLE
SITE PLAN

SHEET
A0.3a

Waterloo Surveyors Inc.

SURVEY PLAT

J13719

ADDRESS:
2100 TRAVIS HEIGHTS BOULEVARD
AUSTIN, TEXAS 78704

LEGAL DESCRIPTION:
LOT5, BLOCK 20, TRAVIS HEIGHTS, A SUBDIVISION IN TRAVIS COUNTY, TEXAS, ACCORDING TO THE MAP OR PLAT OF RECORD IN BOOK3, PAGE 15, PLAT RECORDS OF TRAVIS COUNTY, TEXAS.

T1 12" Spanish Oak
T2 13" Hackberry
T3 17" Pecan
T4 16" Cedar
T5 19" pecan
T6 15" Pecan
T7 16", 13", 12" & 11" Cedar
T8 11" Pecan
T9 14" Pecan
T10 13" Pecan
T11 10" pecan
T12 11" & 9" Pecan
T13 13" Pecan

SCALE
1" = 20'

LEGEND

1/2" FOUND IRON ROD	FIR
1/2" FOUND IRON PIPE	FIP
UTILITY LINE	
WOOD FENCE	
CHAIN LINK FENCE	

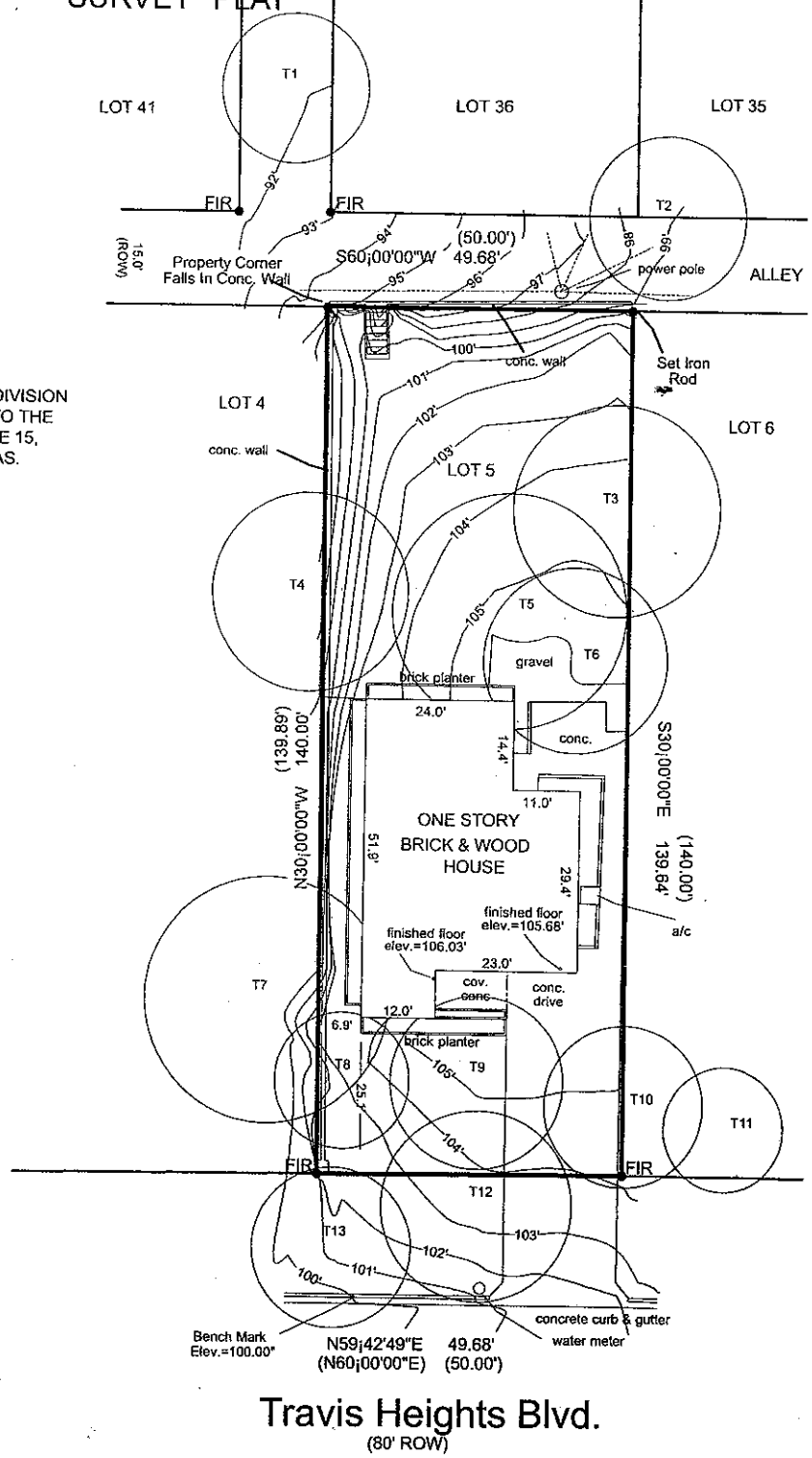

NOTE:
THIS SURVEY WAS PERFORMED WITHOUT THE BENEFIT OF A TITLE COMMITMENT AND OTHER RIGHTS AND RESTRICTIONS MAY APPLY.

EXISTING SURVEY
Scale: 1" = 20 ft

State of Texas:
County of Travis:

The undersigned does hereby certify that this survey was this day made on the property legally described hereon and is correct, and this survey substantially complies with the current Texas Society of Professional Surveyors Standards and Specifications for a Category _____ Condition II Survey.

And I certify that the property shown hereon IS NOT within a special flood hazard area as identified by the Federal Insurance Adm. Department of HUD Flood hazard boundary map revised as per Map Number: 48453C0605H
Zone: X Dated: 9/26/2008

Dated this the 24th day of JUNE, 2013.

Thomas P. Dixon R.P.L.S. 4324

©Copyright 2013

P.O. Box 160176, Austin, Texas 78716-0176 Phone: 481-9602

2100 TRAVIS HEIGHTS

FOLDER DETAILS

Permit/Case	Reference File Name	Description	Sub Type	Work Type	Project Name	Status	Application Date	Issue Date	Expirat Date
2012-062812 PR	2012-062812 PR	**Partial demolition of roof structure to accomodate new second floor above an existing detached garage to include 2 bedrooms, full bath and sink outside; new doors as needed	R- 434 Addition & Alterations	Addition and Remodel	2208 TOWNES LN	Approved	Jun 22, 2012	Aug 30, 2012	Dec 19, 2012

Related Folders:

FOLDER INFO

Information Description	Value
Smart Housing?	No
Is Historical Review Required?	No
Building Valuation Remodel	20000
Electrical Valuation Remodel	0
Will Addition have Electrical Work ?	Yes
Mechanical Valuation Remodel	0
Will Addition have Mechanical Work ?	Yes
Plumbing Valuation Remodel	0
Will Addition have Plumbing Work ?	Yes
Total Valuation Remodel	20000
Total Job Valuation	150000
Is this property in MUD ?	No
Current Zoning for Building	SF-3-NP
Name of Neighborhood Plan	WEST AUSTIN NEIGHBORHOOD GROUP
Subdistrict	NONE
Status	PLANNING UNDERWAY/APPROVED TO BEGIN
Ordinance # Related to Address/Project	0
1704 Flag?	No
Is there a Cut & Fill in excess of 4 ft	No
Building Height (in feet)	23
Parking Spaces Required	3
Number of Bathrooms	4
Size of Water Meter	3/4
Front Set Back	25
Rear Set Back	10
Side Set Back	5
Does property access a paved alley?	No
Does property access a paved street?	Yes
Current Use	sf res
Proposed Use	sf res
Change of Use	No
Square Footage of Lot	9732
Existing 1st Flr Area Sq. Ft	2598
Existing 2nd Flr Area Sq. Ft	879
Existing 3rd Flr Area Sq. Ft	0
Existing Basement Sq. Ft	0

Existing Attached Garage/Carport Sq. Ft	00
Existing Detached Garage/Carport Sq. Ft	661
Existing Wood Decks Sq. Ft	0
Existing Breezeways Sq. Ft	0
Existing Covered Patios Sq. Ft	0
Existing Covered Porches Sq. Ft	0
Existing Balconies Sq. Ft	0
Existing Swimming Pool(s) Sq. Ft	0
Existing Othr Bld/Covered Areas Sq.Ft	500
Total Existing Building Square Footage	4638
New/Addn 1st Flr Area Sq. Ft	0
New/Addn 2nd Flr Area Sq. Ft	0
New/Addn 3rd Flr Area Sq. Ft	0
New/Addn Basement Sq. Ft	0
New/Addn Attached Garage/Carport Sq. Ft	0
New/Addn Detached Garage/Carport Sq. Ft	0
New/Addn Wood Decks Sq. Ft	0
New/Addn Breezeways Sq. Ft	0
New/Addn Covered Patios Sq. Ft	0
New/Addn Covered Porches Sq. Ft	0
New/Addn Balconies Sq. Ft	0
New/Addn Swimming Pool(s) Sq. Ft	0
New/Addn Spa Sq. Ft	0
New/Addn Other Bldg/Covered Areas Sq.Ft	500
Total New/Addition Bldg Square Footage	500
Total Building Coverage on lot Sq. Ft.	40
Driveway area on Private Property	1186
Sidewalk/Walkways on Private Property	0
Uncovered Patios	0
Uncovered Wood Decks	0
AC Pads	12
Concrete Decks	0
Other	0
Total Impervious Coverage Square Footage	1238
Total Impervious Coverage Percent.of Lot	51.7
Max. Bldg. Cov. Sq. Ft. Allowed	.4
Max. Impervious Coverage Sq Ft Allowed	.45
Building Inspection	Yes
Electric Inspection	Yes
Mechanical Inspection	Yes
Plumbing Inspection	Yes
Energy Inspection	No
Driveway Inspection	No
Sidewalks Inspection	No
Environmental Inspection	No
Landscaping Inspection	No
Tree Inspection	No
Water Tap Inspection	No
Sewer Tap Inspection	No
On Site Sewage Facility Inspection	No
Fire Inspection	No
Health Inspection	No
Usage Category	434
Hazardous Pipeline Review Required	No
Electric Service Planning Application Req'd?	Yes
ESPA Application Number	124-206
ESPA Approval Date	Jun 21, 2012
Site has Water availability?	Yes
Site has Waste Water availability?	Yes

Site has waste water liability?	Yes
Site has a septic system?	No
Maximum FAR allowed	3892.8
Floor Area Ratio (FAR)	.42519523222359227291409782161939991779 7
Total Gross Floor Area	4138
Gross Site Area of Lot	9732
Total Number of Driveways	1
Driveway Width 1	12
Total Number of Sidewalks	1
Certificate of Occupancy to be Issued	Yes
Code Year	2006
Code Type	International Residential Code

PROPERTY DETAILS

Number	Pre.	Street	Street Type	Dir	Suite Type	Suite Number	City	State	Zip	Legal Desc
2208		TOWNES	LANE				AUSTIN	TX	78703	Lot: 163 Block: Subdivision:

Lot: 163 Block: Subdivision:

PEOPLE DETAILS

Desc.	Organization Name	Address	City	State	Postal	Phone1
Applicant	Cormier Architecture (James Cormier)	9205 SAN JUAN PASS	AUSTIN	TX	78704	(512)587-6447

PROCESSES AND NOTES

Process Description	Status	Schedule Date	Start Date	End Date	Assigned Staff	# of Atten
Residential Intake	Open	Jun 22, 2012			Residential Support Staff	
Plan Review Administration	Open					
Tree Ordinance Review	Open				Michael Embesi (512-974-1876)	
Residential Revision After Issuance	Open	Aug 30, 2012				
Residential Zoning Review	Approved	Aug 30, 2012	Jul 5, 2012	Aug 30, 2012	Darren Cain	

FOLDER ATTACHMENT

Description Detail

View Attachment

Back

PAY ONLINE CALENDAR MEDIA CENTER FAQ CONTACT US SITE MAP LEGAL NOTICES PRIVACY

City of Austin
Residential Permit Application

Residential Review, 2nd floor, One Texas Center
505 Barton Springs, Austin, TX 78704
(512) 974-2747

For Departmental Use Only		
PR-# 12-062812	BP-# 12-058061
Assigned:	Due Date:
Review Date: 7-24-12	Issue Date:
Reviewed/Approved:	Issued: 9/5/12

Project Information

Project Address: 2208 TOWNES LANE
Tax Parcel ID: 115857

Legal Description: LOT 163 & E 25 FT OF LOT 162 TARRT TOWN #6

Zoning: SF-3-NP West Austin Neigh. Group
Lot Size (square feet): 9732

Neighborhood Plan Area (if applicable): CENTRAL WEST COMB.
Historic District (if applicable):

Is this site within the Residential Design and Compatibility Standards Ordinance Boundary Area? (Y) N
Note: Boundaries are defined under Title 25-2 Subchapter F of the Land Development Code.

Does this site currently have water availability? (Y) N wastewater availability? (Y) N
If no, contact Austin Water Utility to apply for water/wastewater taps and/or service extension request.

Does this site have a septic system? Y (N) If yes, submit a copy of approved septic permit to construct

Does this site require a cut or fill in excess of four (4) feet? Y (N)
If yes, contact the Development Assistance Center for a Site Plan Exemption.

Does this site front a paved street? (Y) N Is this site adjacent to a paved alley? Y (N)

Does this site have a Board of Adjustment (BOA) variance? Y (N) Case # (if applicable)

Does this site have a Residential Design and Compatibility Commission (RDCC) waiver? Y (N)
If yes, provide a copy of decision sheet. **Note: A permit cannot be approved within 10 days of approval of a variance from BOA.**

Does the project impact a tree protected by ordinance? This would include canopy and/or critical root zone. Y (N)
Note: If yes, application for a tree permit with the City Arborist may be required.

Is this site within one hundred-fifty (150) feet of the one hundred (100) year floodplain? Y (N)
Note: Proximity to a floodplain may require additional review time.

Description of Work

Existing Use: vacant (single-family residential) duplex residential two-family residential other

Proposed Use: vacant (single-family residential) duplex residential two-family residential other

Project Type: new construction addition (addition/remodel) remodel/repair other

# of bedrooms existing: 3 | # of bedrooms proposed: 5 | # of baths existing: 4 | # of baths proposed: 5

Will all or part of an existing exterior wall be removed as part of the project? (Y) N
Note: Removal of all or part of a structure requires a demolition permit.

Project Description: (Note: Please provide thorough description of project. Attach additional pages as necessary)

ADDITION TO A ONE STORY DETACHED GARAGE + HOME OFFICE. ADDITION TO BE CONTAINED ENTIRELY ABOVE THE EXISTING FOOT PRINT. FRONT STONE WALL TO BE REMOVED + REPLACED. NEW DOOR @ EAST ELEVATION ON FIRST FLOOR.

Trades Permits Required: X electric X plumbing X mechanical (HVAC) concrete (right-of-way)

Job Valuation

Total Job Valuation: $ 150,000

Note: The total job valuation should be the sum total of all valuations noted to the right. Labor and materials only, rounded to nearest dollar. Permit fees are based on adopted fee schedule.

Portion of Total Job Valuation Dedicated to Addition/New Construction: $ 130,000

Primary Structure: $
Accessory Structure: $

Portion of Total Job Valuation Dedicated to Remodel/Repair: $ 20,000

Bldg: $ Elec: $
Plmbg: $ Mech: $

(1) Must count crushed granite as IC.
(2) Stairwell is not being counted as roof height over 5 feet in attic exception

(3) ~~Over FAR~~
(4) Modified to add

2nd Review 8-11-12
(1)

ICAD-1
GIS ✓
Annot.
Trace ✓

Site Development Information

Building Coverage Information
Note: Building Coverage means the area of a lot covered by buildings or roofed areas, but excludes ground level paving, landscaping, open recreational facilities, incidental projecting eaves, balconies, and similar features. Pools, ponds, and fountains are not included in this measurement. (LDC 25-1-21)

Existing Building Coverage (sq ft): 3,904 % of lot size: 40%

Proposed Building Coverage (sq ft): 3,904 % of lot size: 40%

Impervious Cover Information
Note: Impervious cover is the total horizontal area of covered spaces, paved areas, walkways, and driveways. The term excludes pools, ponds, fountains, and areas with gravel placed over pervious surfaces that are used only for landscaping or by pedestrians. (LDC 25-1-23)

Existing Impervious Cover (sq ft): ~~4294~~ 5,102 % of lot size: ~~44%~~ 51.7% JL

Proposed Impervious Cover (sq ft): ~~4294~~ 5,102 JL % of lot size: ~~44%~~ 51.7% JL

Setbacks
Are any existing structures on this site a non-compliant structure based on a yard setback requirement? (LDC 25-2-513) (Y) N

Does any structure (or an element of a structure) extend over or beyond a required yard? (LDC 25-2-513) (Y) N

Is front yard setback averaging being utilized on this property? (LDC 25-2, Subchapter F, Sec. 2.3) Y (N)

Height Information (LDC 25-1-21 or 25-2 Subchapter F, Section 3.4)

Building Height: 15 ft Number of Floors: 2

Parking (LDC 25-6 Appendix A & 25-6-478)

# of spaces required: 2 # of spaces provided: 2

Right-of-Way Information
Is a sidewalk required for the proposed construction? (LDC-6-353) Y (N)
***Sidewalks are to be installed on any new construction of a single family, two-family or duplex residential structure and any addition to an existing building that increases the building's gross floor area by 50 % or more.**

Will a Type I driveway approach be installed, relocated, removed or repaired as part of this project? Y (N)

Width of approach (measured at property line): ____ ft Distance from intersection (for corner lots only): ____ ft

Are storm sewer inlets located along the property or within ten (10) feet of the boundaries of the property? Y N

Building and Site Area

Area Description Note: Provide a separate calculation for each distinct area. Attach additional sheets as necessary. Measurements are to the outside surface of the exterior wall.	Existing Sq Ft	New/Added Sq Ft	Total Sq Ft
1st floor conditioned area	2598	-0-	2598
2nd floor conditioned area	879	-0-	879
3rd floor conditioned area	-	-	
Basement	-	-	
Covered Parking (garage or carport)	-	-	
Covered Patio, Deck or Porch / /	645	-0-	645
Balcony	-	-	
Other	661	500	1161
Total Building Coverage	~~350~~ 1186 JL	-	~~350~~ 1186 JL
Driveway	-	-	-
Sidewalks	-	-	-
Uncovered Patio /	-	-	-
Uncovered Wood Deck (counts at 50%)	-	-	-
AC pads	12	-	12
Other (Pool Coping, Retaining Walls)	-	-	-
Total Site Coverage			
Pool	-	-	-
Spa	-	-	-

Gross Floor Area

This section is only required for projects located within the Residential Design and Compatibility Standards Ordinance Boundaries as defined and illustrated in Title 25-2 Subchapter F of the Land Development Code. The Gross Floor Area of each floor is measured as the area contained within the outside edge of the exterior walls.

	Existing	New	Exemption	Total
1st Floor	2598			2598
2nd Floor	879			879
3rd Floor				
Basement				
Attic	500		500	0
Garage (attached)				
(detached)	661			661
Carport (attached)				
(detached)				
Accessory building(s) (detached)	~~661~~ 882			~~661~~ 882
TOTAL GROSS FLOOR AREA				4,130 ~~42.5~~

(Total Gross Floor Area /lot size) x 100 = 42.5 **Floor-To-Area Ratio (FAR)**

Is this project claiming a "parking area" exemption as described under Article 3?	Y	N
Is this project claiming a "ground floor porch" exemption as described under Article3?	Y	N
Is this project claiming a "basement" exemption as described under Article 3?	Y	N
Is this project claiming a "habitable attic" exemption as described under Article 3?	(Y)	N
Is a sidewall articulation required for this project?	Y	N
Does any portion of the structure extend beyond a setback plane?	Y	N

Parking Area exemption: Up to 450 square feet of a parking area may be deducted if it is a detached rear parking area that is separated from the principal structure by not less than 10 feet; or attached by a covered breezeway that is completely open on all sides, with a walkway not exceeding 6 feet in width and a roof not exceeding 8 feet in width; or a parking area that is open on two or more sides, if: it does not have habitable space above it; and the open sides are clear and unobstructed for at least 80% of the area measured below the top of the wall plate to the finished floor of the carport. Up to 200 square feet may be deducted if it is an attached parking area used to meet the minimum parking requirement; or a garage that is less than 10 feet from the rear of the principal structure, provided that the garage is either detached from the principal structure; or attached by a covered breezeway that is completely open on all sides, with a walkway not exceeding 6 feet in width and a roof not exceeding 8 feet in width. An applicant may receive only one 450-square foot exemption per site under Article 3. An applicant who receives a 450-square foot exemption may receive an additional 200-foot exemption for the same site under Article 3, but only for an attached parking area used to meet minimum parking requirements.

Ground Floor Porch exemption: A ground floor porch, including a screened porch, may be exempted, provided that the porch is not accessible by automobile and is not connected to a driveway; and the exemption may not exceed 200 square feet if a porch has habitable space or a balcony above it.

Basement exemption: A habitable portion of a building that is below grade may be exempted if the habitable portion does not extend beyond the first-story footprint and is below natural or finished grade, whichever is lower; and it is surrounded by natural grade for at least 50% of its perimeter wall area and the finished floor of the first story is not more than three feet above the average elevation at the intersections of the minimum front yard setback line and the side property lines.

Habitable Attic exemption: A habitable portion of an attic may be exempted if: 1. The roof above it is not a flat or mansard roof and has a slope of 3 to 12 or greater; 2. It is fully contained within the roof structure; 3. It has only one floor; 4. It does not extend beyond the footprint of the floors below; 5. It is the highest habitable portion of the building, or a section of the building, and adds no additional mass to the structure; and 6. Fifty percent or more of the area has a ceiling height of seven feet or less.

Contact Information

Owner	GARRT MAURO	Applicant or Agent	JAMES CORMIER
Mailing Address		Mailing Address	401 CONGRESS AVE, STE 1600
Phone		Phone	512.587.6447
Email		Email	jcormier@cormierarch.com
Fax		Fax	
General Contractor	PB Construction	Design Professional	JAMES CORMIER
Mailing Address		Mailing Address	same as above
Phone		Phone	
Email		Email	
Fax		Fax	

Acknowledgments

Is this site registered as the owner's homestead for the current tax year with the appraisal district? (Y) N

I understand that in accordance with Sections 25-1-411 and 25-11-66 of the Land Development Code (LDC), non-compliance with the LDC may be cause for the Building Official to suspend or revoke a permit and/or license.

I understand that I am responsible for complying with any subdivision notes, deed restrictions, restrictive covenants and/or zoning conditional overlays prohibiting certain uses and/or requiring certain development restrictions (i.e., height, access, screening, etc.) on this property.

If a conflict should result with any of these restrictions, it will be my responsibility to resolve it. I understand that, if requested, I must provide copies of all subdivision plat notes, deed restrictions, restrictive covenants, and/or zoning conditional overlay information that may apply to this property.

I acknowledge that this project qualifies for the Site Plan Exemption as listed in Section 25-5-2 of the LDC. I understand that nothing may be built upon or over an easement.

I further understand that no portion of any roof structure may overhang in any public utility or drainage easement. I acknowledge that customer will bear the expense of any necessary relocation of existing utilities to clear this driveway location and/or the cost to repair any damage to existing utilities caused during construction.

I agree that this application will expire on the 181st day after the date that the application is filed if the application is not approved and an extension is not granted. If the application expires, a new submittal will be required and compliance with current code may be required.

I hereby certify that to the best of my knowledge and ability, the information provided in this application is complete and accurate.

I further acknowledge that, should any information contained herein prove incorrect, the building official may suspend or revoke any resulting permit and/or license.

I also understand that if there are any trees greater than 19 inches in diameter located on the property and immediately adjacent to the proposed construction, I am to schedule a Tree Ordinance review by contacting (512) 974-1876 and receive approval to proceed.

I acknowledge that a sidewalk will be required on any new construction of a single family, two-family or duplex residential structure and any addition to an existing building that increases the building's gross floor area by 50 % or more.

I acknowledge if my plans are subject to a technical review it will not be construed to be a permit for, or an approval of any violation of any of the provisions of the current adopted building codes or another ordinance of the City of Austin.

Applicant's signature: [signature] Date: 5/29/12

LDC EXCERPTS
25-1-21 DEFINITIONS. (35) DWELLING UNIT means a residential unit other than a mobile home providing complete, independent living facilities including permanent provisions for living, sleeping, eating, and cooking.

AE APPROVED
JUN 2 1 2012
174-204
JGM

LEGAL DESCRIPTION:
LOT 163 *& E 25 FT OF LOT 162 TARRY TOWN NO

All structures etc. must maintain 7'5" clearance from AE energized power lines. Enforced by AE & NESC codes.

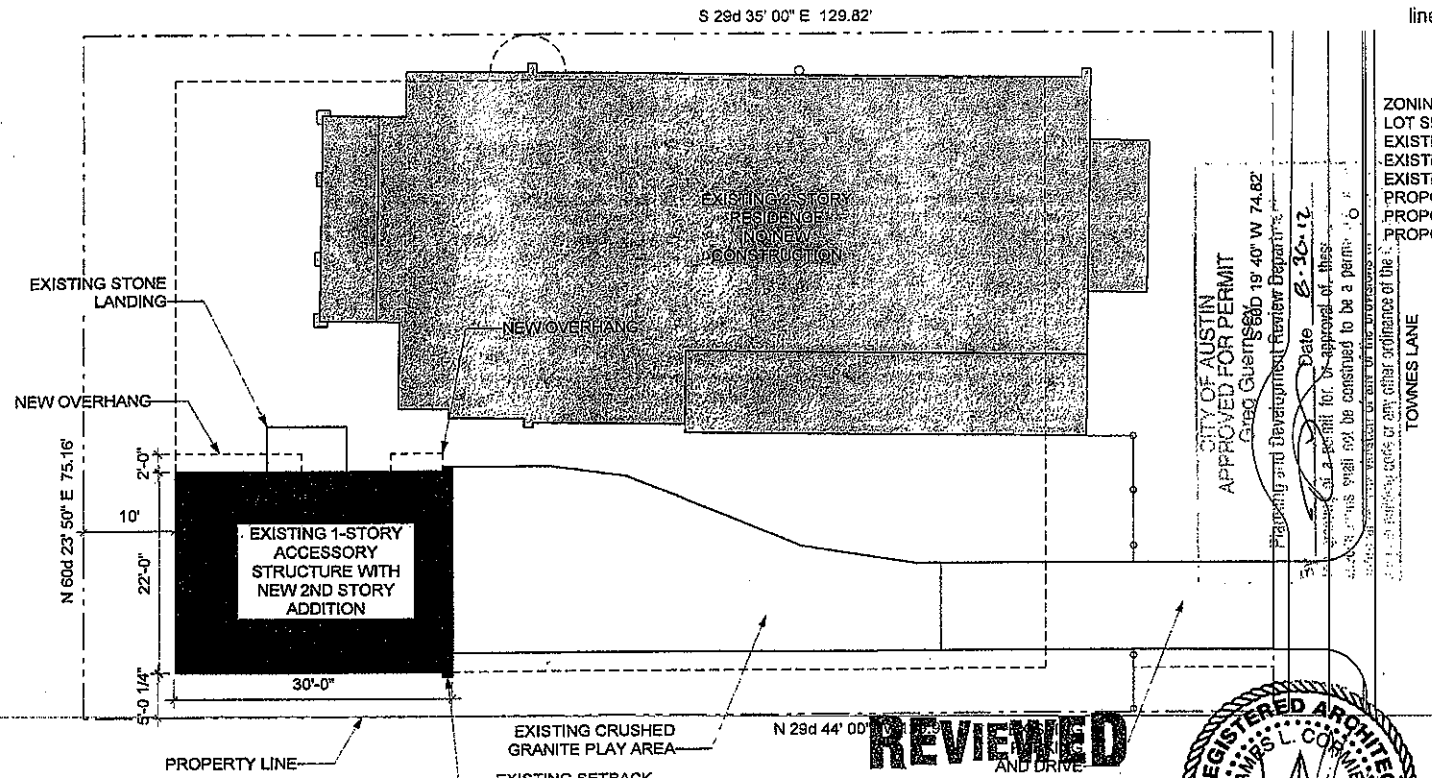

ZONING: SF-3-NP
LOT SIZE: 9,732 SF
EXISTING BUILDING COVERAGE: 40%
EXISTING IMPERVIOUS COVERAGE: 44%
EXISTING GROSS FLOOR AREA: 42.5%
PROPOSED BUILDING COVERAGE: NO CHANGE
PROPOSED IMPERVIOUS COVERAGE: NO CHANGE
PROPOSED GROSS FLOOR AREA: NO CHANGE

NOTES:
1. ADDITION FULLY CONTAINED ABOVE EXISTING DETACHED STORAGE/HOME OFFICE STRUCTURE.
2. EXISTING GROSS FLOOR AREA AS DEFINED IN SUBCHAPTER F OF THE LAND DEVELOPMENT CODE IS 42.5%. ALL ADDITIONAL SQUARE FOOTAGE IS EXEMPTED UNDER THE HABITABLE ATTIC EXEMPTION.

DRAWING LIST

A-1 SITE PLAN
A-2.1 DEMO PLAN
A-2.2 1ST FLOOR PLAN
A-2.3 2ND FLOOR PLAN
A-3 NOT USED
A-4.1 EAST ELEV
A-4.2 SOUTH ELEV
A-4.3 NORTH ELEV
A-4.4 WEST ELEV
A-5.1 SECTION 1
A-5.2 SECTION 2
A-5.3 SECTION 3
A-5.4 SECTION 4
A-5.5 SECTION 5
A-5.6 SECTION 6

1 SITE PLAN
Scale: 1/16" = 1'-0"

REVIEWED
JUN 1 1 2012
AUSTIN WATER UTILITY
CONSUMER SERVICE DIVISION - TAPS

REGISTERED ARCHITECT
JAMES L. CORMIER
14671
STATE OF TEXAS
6/3/12

CORMIER ARCHITECTURE
401 CONGRES AVENUE
SUITE 401
AUSTIN, TX 78704
(512) 587-5447
jcormier@cormierarch.com

PROJECT: MAURO ADDITION #2
ADDRESS: 2208 TOWNES LANE
AUSTIN, TX 78703
ISSUED: 5/29/12

A-1

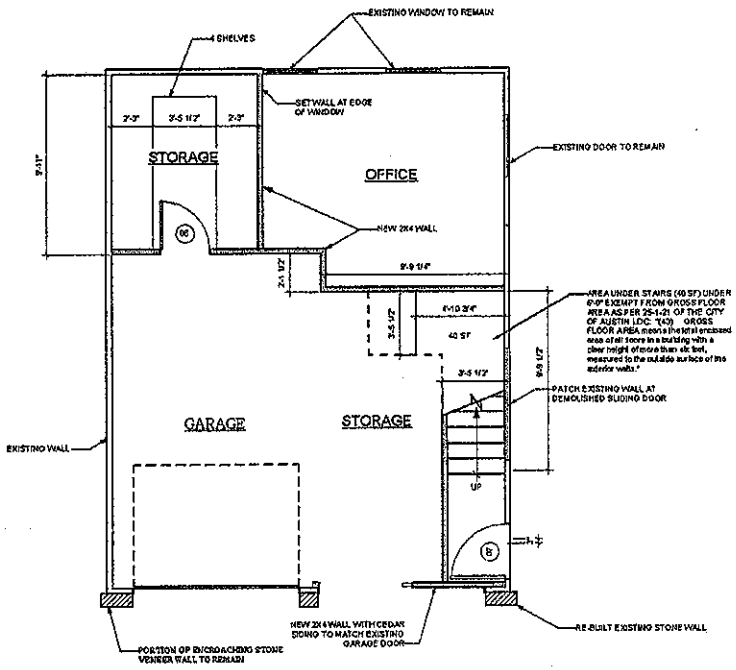

1 1ST FLOOR PLAN
Scale: 1/4" = 1'-0"
REDUCED SET ON LEGAL AT SCALE: 1/8"=1'-0"

REVIEWED FOR ZONING ONLY

REGISTERED ARCHITECT JAMES T. CORMIER 1467 STATE OF TEXAS
8/20/12

CORMIER ARCHITECTS
PROJECT: MAURO ADDITION #2
ADDRESS: 2208 TOWNES LANE AUSTIN, TX 78703
DATE: 6/20/12
REV. 1: 7/24/12
REV. 2: 8/14/12

A-2.2
3 OF 16

REVIEWED FOR ZONING ONLY

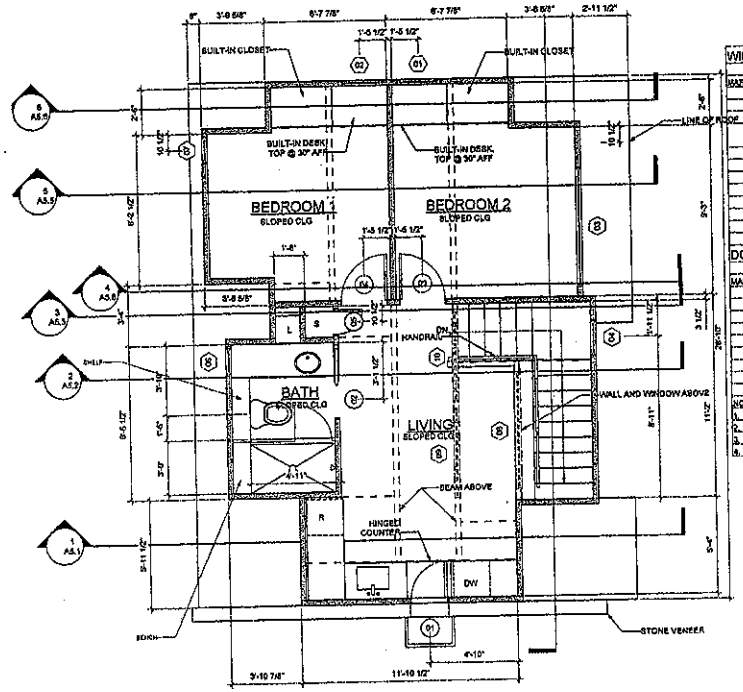

1 ATTIC FLOOR PLAN
Scale: 1/4" = 1'-0"
REDUCED SET ON LEGAL AT SCALE: 1/8"=1'-0"

WINDOW SCHEDULE

MARK	R.O. WIDTH	HEIGHT	TYPE	RESCUE	NOTES
1	1'6 1/2"	2'11 1/2"	CASEMENT	YES	
2	1'5 1/2"	2'11 1/2"	CASEMENT	YES	
3	6'6"	6 1/2"	AWNING + FIXED	NO	18"X18" AWNING
4	1'11 1/2"	7'11 1/2"	FIXED + AWNING + FIXED	NO	2 UNITS NOT MULLED
5	3'11 1/2"	1'5 1/2"	AWNING	NO	2 UNITS NOT MULLED
6	5 1/2"	1'5 1/2"	CASEMENT	NO	
7	6 1/2"	1'5 1/2"	CASEMENT	NO	
8	6'6"	6 1/2"	AWNING + FIXED	NO	18"X18" AWNING
9	4'11 1/2"	2'11 1/2"	FIXED	NO	
10	4'11 1/2"	2'11 1/2"	FIXED	NO	

DOOR SCHEDULE

MARK	SIZE WIDTH	HEIGHT	TYPE	LOC	NOTES
1	2'6"		6'4" SWING	EXT	1,
2	1'6"		6'4" POCKET	INT	2,3
3	1'4"		6'4" SWING	INT	2,
4	1'4"		6'4" SWING	INT	2,
5	6"		6'4" SWING	INT	2,
6	3'0"		6'4" SWING	INT	2,
7	1'4"		6'4" SWING	EXT	4,
8	1'4"		6'4" SWING	EXT	4,

NOTES:
1. SINGLE LITE FRENCH DOOR
2. SOLID CORE FLUSH SLAB
3. HEAVY DUTY HARDWARE
4. SOLID CORE STEEL

REGISTERED ARCHITECT JAMES L. CORMIER 14071 STATE OF TEXAS
7/31/12

CORMIER ARCHITECTURE
8212 BURNET ROAD, SUITE 100
AUSTIN, TEXAS
512-371-1100
cormier@cormierarch.com

PROJECT: MAURO ADDITION #2
ADDRESS: 2208 TOWNES LANE
AUSTIN, TX 78703

ISSUED: 6/29/12
REV. 1: 7/31/12

A-2.3

4 OF 16

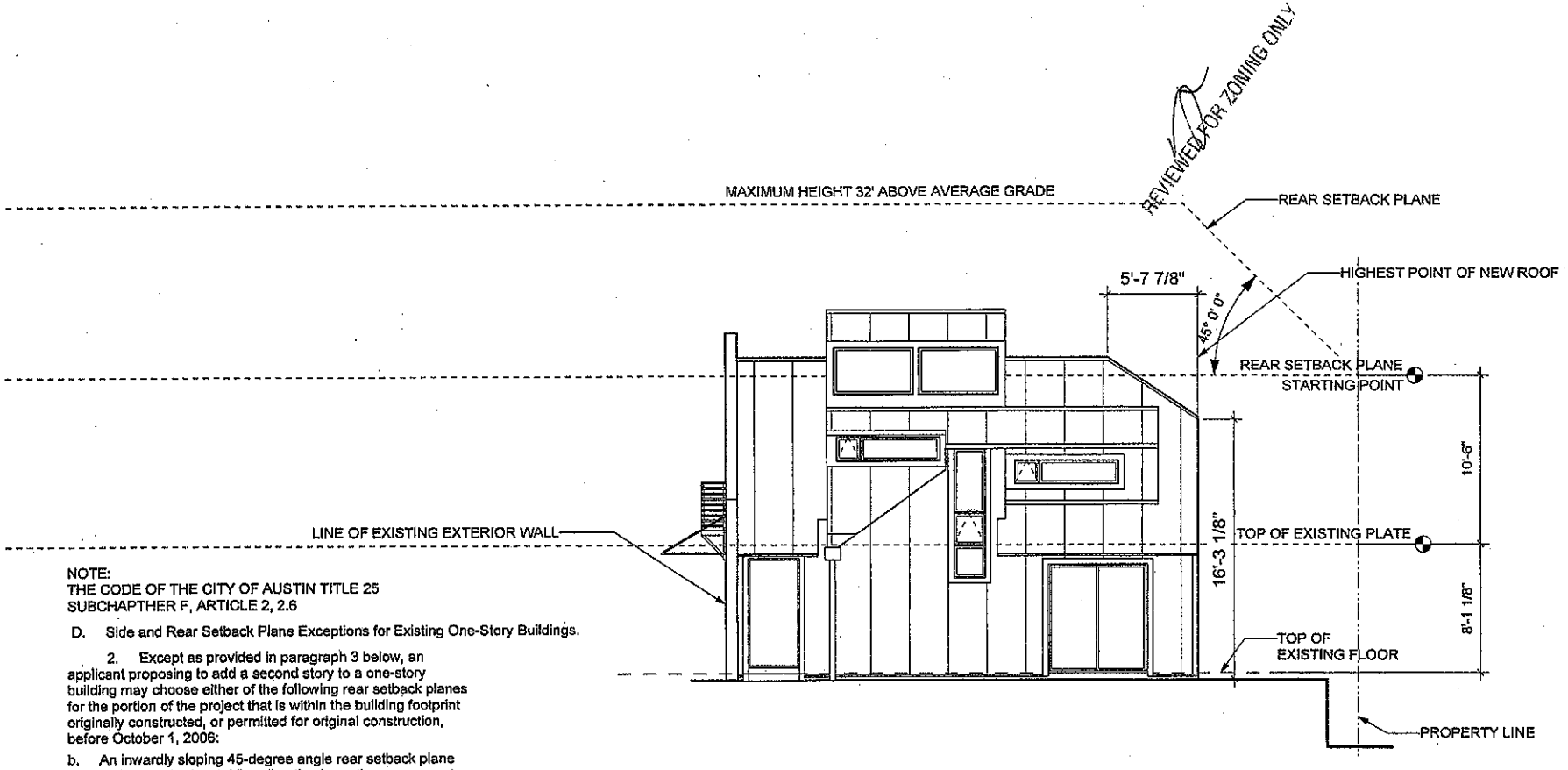

1 EAST ELEVATION
Scale: 1/8" = 1'-0"

NOTE:
THE CODE OF THE CITY OF AUSTIN TITLE 25
SUBCHAPTHER F, ARTICLE 2, 2.6

D. Side and Rear Setback Plane Exceptions for Existing One-Story Buildings.

2. Except as provided in paragraph 3 below, an applicant proposing to add a second story to a one-story building may choose either of the following rear setback planes for the portion of the project that is within the building footprint originally constructed, or permitted for original construction, before October 1, 2006:

b. An inwardly sloping 45-degree angle rear setback plane that begins at a horizontal line directly above the rear property line at a height equal to the height of the first floor wall plate that was originally constructed or received a building permit before October 1, 2006, plus 10 and one-half feet

3. The side setback plane required under subsection A, and the rear setback plane required under subsection B, apply to:

a. any portion of the proposed construction that is outside of the building footprint originally constructed, or permitted for original construction, before October 1, 2006; and

b. the entire project, if any portion of the proposed nstruction requires the removal or demolition of exterior 's.

REGISTERED ARCHITECT
JAMES L. CORMIER
14671
STATE OF TEXAS
7/31/12

CORMIER
ARCHITECTURE
401 CONGRES AVENUE
SUITE 401
AUSTIN, TX 78704
(512) 587-6447
jcormier@cormierarch.com

PROJECT: MAURO ADDITION
ADDRESS: 2208 TOWNES LANE
AUSTIN, TX 78703

ISSUED: 6/20/12
REV. 1: 7/31/12

A-4.1

NOTE:
THE CODE OF THE CITY OF AUSTIN TITLE 25
SUBCHAPTHER F, ARTICLE 2, 2.6

D. Side and Rear Setback Plane Exceptions for Existing One-Story Buildings.

1. Except as provided in paragraph 3 below, an applicant proposing to add a second story to a one-story building may choose either of the following side setback planes for the portion of the project that is within the building footprint originally constructed, or permitted for original construction, before October 1, 2006:

b. The inwardly sloping 45-degree angle side setback plane that begins at a horizontal line directly above the outermost side wall at a height equal to the height of the first floor wall plate that was originally constructed or received a building permit before October 1, 2006, plus 10 and one-half feet. See Figure 12. The wall plate is the lowest point of the existing first floor ceiling framing that intersects the exterior wall

REVIEWED FOR ZONING ONLY

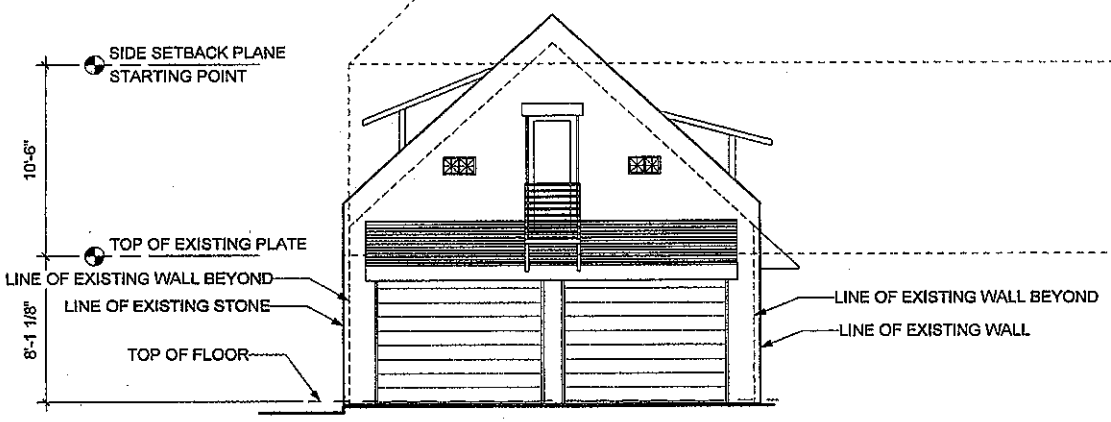

1 SOUTH ELEVATION
Scale: 1/8" = 1'-0"

REGISTERED ARCHITECT
JAMES L. CORMIER
14671
STATE OF TEXAS
7/31/12

CORMIER
ARCHITECTURE
401 CONGRES AVENUE
SUITE 401
AUSTIN, TX 78704
(512) 587-6447
jcormier@cormierarch.com

PROJECT: MAURO ADDITION

ADDRESS: 2208 TOWNES LANE
AUSTIN, TX 78703

ISSUED: 6/20/12
REV. 1: 7/31/12

A-4.2

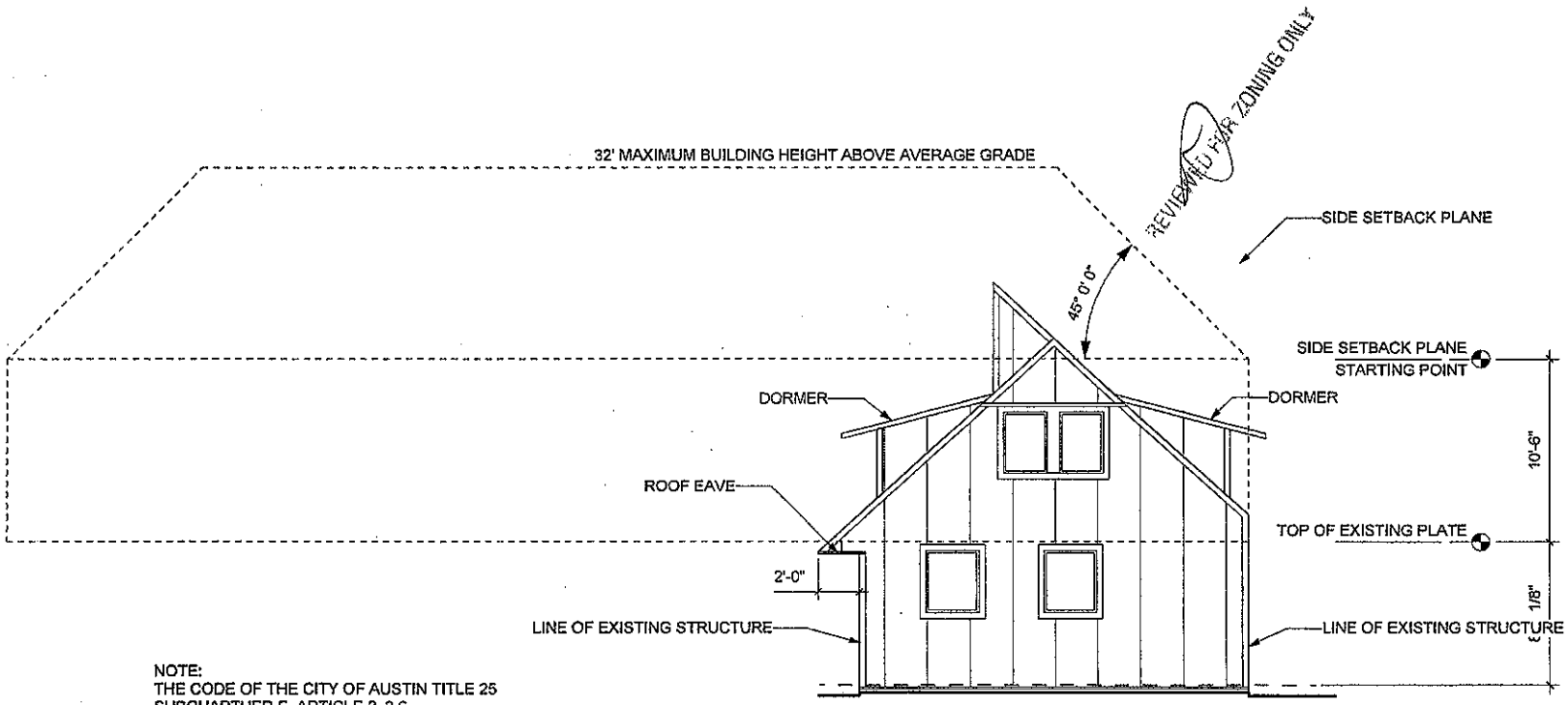

NOTE:
THE CODE OF THE CITY OF AUSTIN TITLE 25
SUBCHAPTHER F, ARTICLE 2, 2.6

D. Side and Rear Setback Plane Exceptions for Existing One-Story Buildings.

1. Except as provided in paragraph 3 below, an applicant proposing to add a second story to a one-story building may choose either of the following side setback planes for the portion of the project that is within the building footprint originally constructed, or permitted for original construction, before October 1, 2006:

b. The inwardly sloping 45-degree angle side setback plane that begins at a horizontal line directly above the outermost side wall at a height equal to the height of the first floor wall plate that was originally constructed or received a building permit before October 1, 2006, plus 10 and one-half feet. See Figure 12. The wall plate is the lowest point of the existing first floor ceiling framing that intersects the exterior wall

1 NORTH ELEVATION
Scale: 1/8" = 1'-0"

REGISTERED ARCHITECT
JAMES L. CORMIER
14671
STATE OF TEXAS
7/31/12

CORMIER ARCHITECTURE
401 CONGRES AVENUE
SUITE 401
AUSTIN, TX 78704
(512) 587-5447
jcormier@cormierarch.com

PROJECT: MAURO ADDITION
ADDRESS: 2208 TOWNES LANE
AUSTIN, TX 78703

ISSUED: 6/20/12
REV. 1: 7/31/12

A-4.3

NOTE:
THE CODE OF THE CITY OF AUSTIN TITLE 25
SUBCHAPTHER F, ARTICLE 2, 2.6

D. Side and Rear Setback Plane Exceptions for Existing One-Story Buildings.

1. Except as provided in paragraph 3 below, an applicant proposing to add a second story to a one-story building may choose either of the following side setback planes for the portion of the project that is within the building footprint originally constructed, or permitted for original construction, before October 1, 2006:

b. The inwardly sloping 45-degree angle side setback plane that begins at a horizontal line directly above the outermost side wall at a height equal to the height of the first floor wall plate that was originally constructed or received a building permit before October 1, 2006, plus 10 and one-half feet. See Figure 12. The wall plate is the lowest point of the existing first floor ceiling framing that intersects the exterior wall

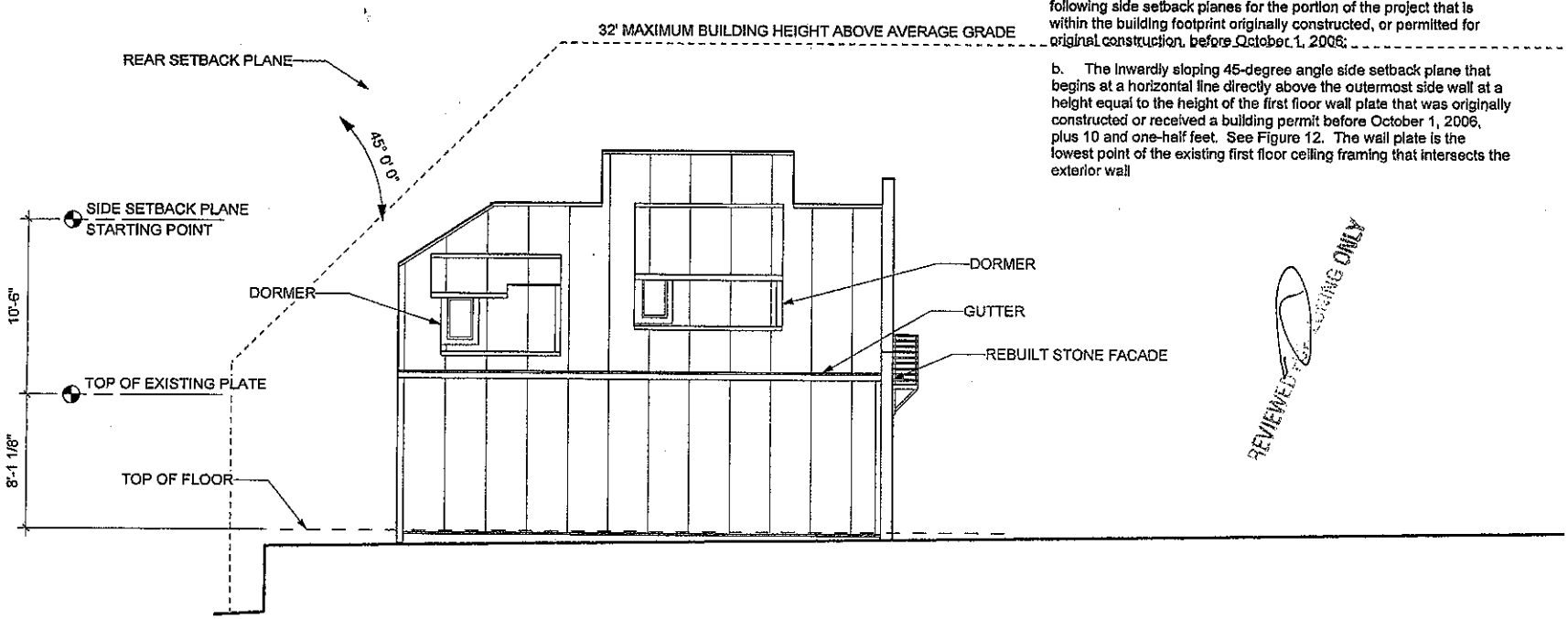

1 WEST ELEVATION
Scale: 1/8" = 1'-0"

REVIEWED FOR ZONING ONLY

REGISTERED ARCHITECT
JAMES L. CORMIER
14671
STATE OF TEXAS
7/31/12

CORMIER ARCHITECTURE
401 CONGRES AVENUE
SUITE 401
AUSTIN, TX 78704
(512) 587-6447
jcormier@cormierarch.com

PROJECT: MAURO ADDITION
ADDRESS: 2208 TOWNES LANE
AUSTIN, TX 78703

ISSUED: 6/20/12
REV. 1: 7/31/12

A-4.4

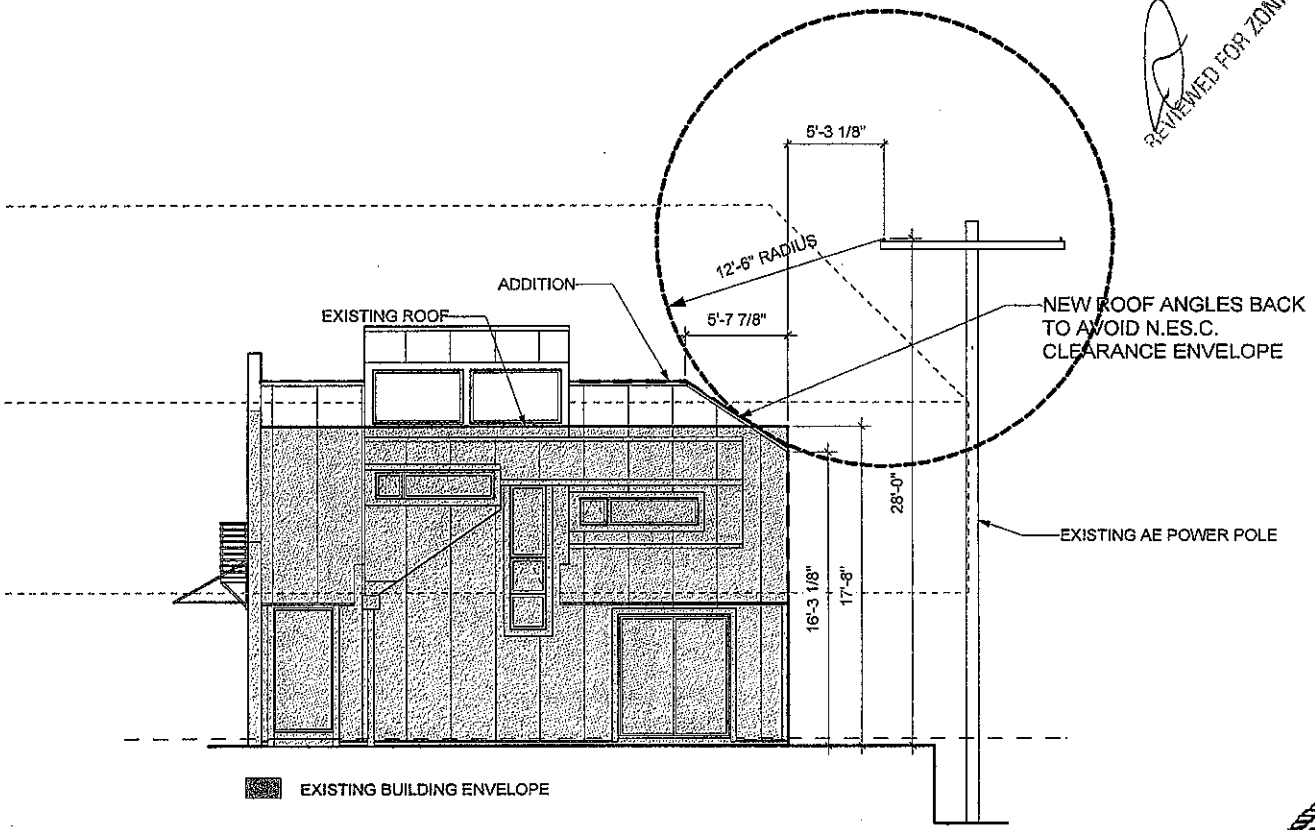

REVIEWED FOR ZONING ONLY

AUSTIN ENERGY OVERHEAD CLEARANCE EXHIBIT

1 EAST ELEVATION
Scale: 1/8" = 1'-0"

REGISTERED ARCHITECT
JAMES L. CORMIER
14671
STATE OF TEXAS
7/31/12

CORMIER
ARCHITECTURE
401 CONGRES AVENUE
SUITE 401
AUSTIN, TX 78704
(512) 587-6447
jcormier@cormierarch.com

PROJECT: MAURO ADDITION

ADDRESS: 2208 TOWNES LANE
AUSTIN, TX 78703

ISSUED: 6/20/12
REV. 1: 7/31/12

A-4.5

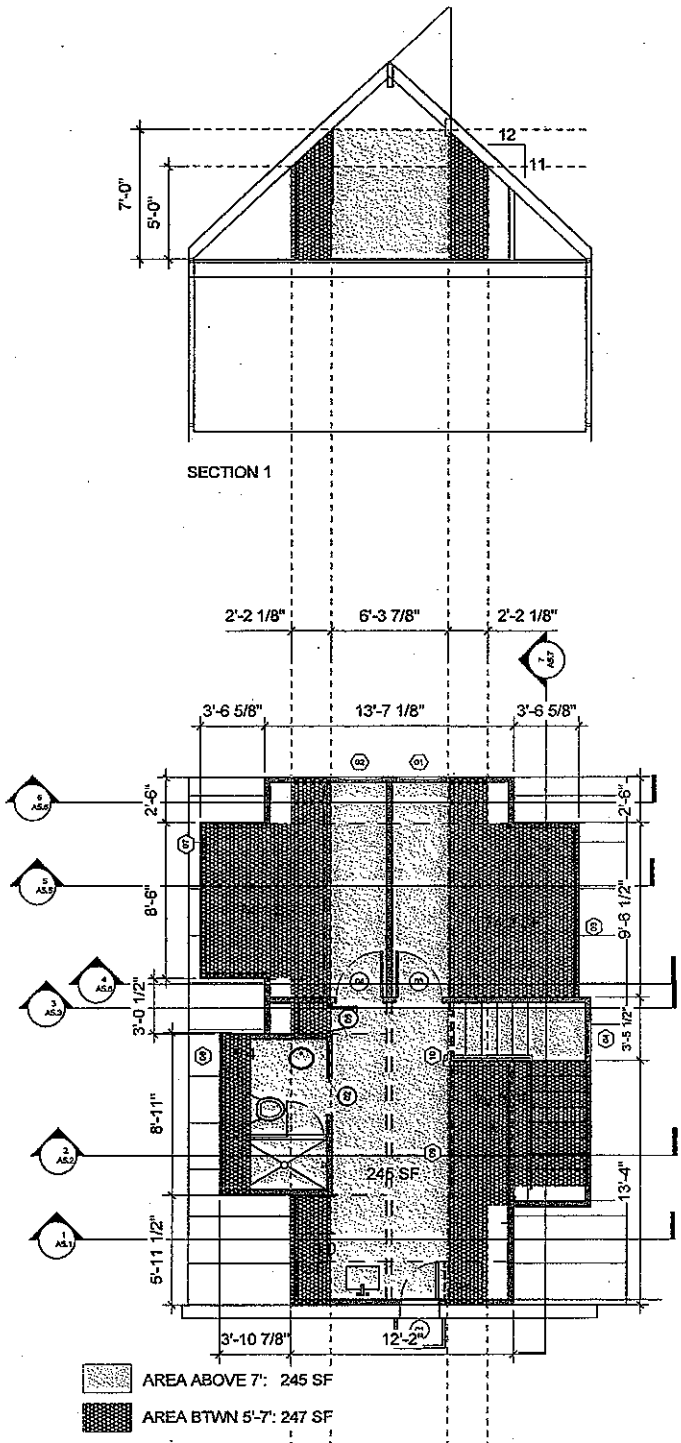

REVIEWED FOR ZONING ONLY

REGISTERED ARCHITECT
JAMES L. CORMIER
14871
STATE OF TEXAS
7/31/12

A-5.1 10 OF 16	ISSUED: 5/29/12 REV. 1: 7/31/12	PROJECT: MAURO ADDITION ADDRESS: 2208 TOWNES LANE AUSTIN, TX 78703	CORMIER ARCHITECTURE 401 CONGRES AVENUE SUITE 401 AUSTIN, TX 78704 (512) 587-6447 jcormier@cormierarch.com

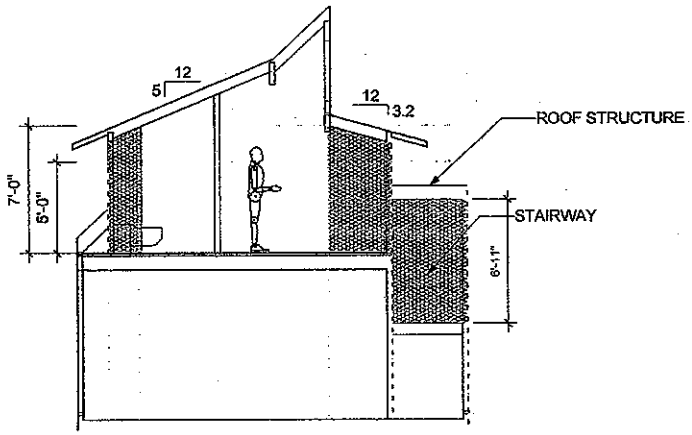

SECTION 2

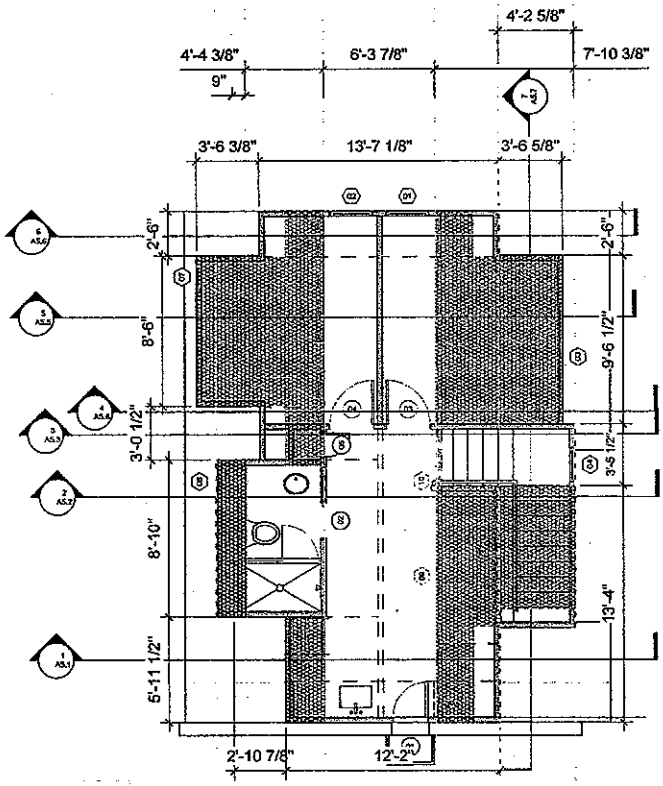

AREA ABOVE 7': 245 SF

AREA BTWN 5'-7': 247SF

REVIEWED FOR ZONING ONLY

REGISTERED ARCHITECT
JAMES L. CORMIER
14657
STATE OF TEXAS

7/31/12

A-5.2	11OF 16	ISSUED: 5/29/12 REV. 1: 7/31/12	PROJECT: MAURO ADDITION ADDRESS: 2208 TOWNES LANE AUSTIN, TX 78703

CORMIER
ARCHITECTURE
401 CONGRES AVENUE
SUITE 401
AUSTIN, TX 78704
(512) 587-6447
jcormier@cormierarch.com

FOLDER DETAILS

Permit/Case	Reference File Name	Description	Sub Type	Work Type	Project Name	Status	Application Date	Issue Date	Expirati Date
2013-077584 PR	2013-077584 PR	New 2-story single family residence with (3) bedrooms, (2.5) bathrooms, attached garage and exempted attic. New 2-story secondary apartment with (2) bedrooms, (2) bathrooms, attached garage and exempted attic.	R- 101 Single Family Houses	New	1710 E 18TH ST	Approved	Jul 26, 2013	Sep 6, 2013	Jan 22, 2014

Related Folders:

FOLDER INFO

Information Description	Value
Is this over a Landfill ?	No
Smart Housing?	No
Volume Builder	No
Is this a one/two unit condo?	No
Is Historical Review Required?	No
Is this property in MUD ?	No
Current Zoning for Building	SF-3-NP
Name of Neighborhood Plan	Central East Austin
Is this a Legal Lot ?	Yes
Is Site Plan or Site Plan Exemption req?	No
Is there a Cut & Fill in excess of 4 ft	No
Parking Spaces Required	3
Number of Bathrooms	4.5
Size of Water Meter	(2) 5/8"
Front Set Back	25
Rear Set Back	10
Side Set Back	5
Street Side Set Back	15
Does property access a paved alley?	No
Does property access a paved street?	Yes
Current Use	Vacant
Proposed Use	Two family residential
Square Footage of Lot	6921
New/Addn 1st Flr Area Sq. Ft	1432
New/Addn 2nd Flr Area Sq. Ft	1244
New/Addn 3rd Flr Area Sq. Ft	830
New/Addn Basement Sq. Ft	0
New/Addn Attached Garage/Carport Sq. Ft	551
New/Addn Detached Garage/Carport	0

Sq. Ft	0
New/Addn Wood Decks Sq. Ft	0
New/Addn Breezeways Sq. Ft	0
New/Addn Covered Patios Sq. Ft	333
New/Addn Covered Porches Sq. Ft	0
New/Addn Balconies Sq. Ft	59
New/Addn Swimming Pool(s) Sq. Ft	0
New/Addn Spa Sq. Ft	0
New/Addn Other Bldg/Covered Areas Sq.Ft	473
Total New/Addition Bldg Square Footage	4922
Total Building Coverage on lot Sq. Ft.	2316
Total Building Coverage Percent, of Lot	33.5
Driveway area on Private Property	476
Sidewalk/Walkways on Private Property	142
Uncovered Patios	0
Uncovered Wood Decks	0
AC Pads	27
Concrete Decks	0
Other	0
Total Impervious Coverage Square Footage	2961
Total Impervious Coverage Percent.of Lot	42.8
Max. Bldg. Cov. Sq. Ft. Allowed	2768
Max. Impervious Coverage Sq Ft Allowed	3114
Building Inspection	Yes
Electric Inspection	Yes
Mechanical Inspection	Yes
Plumbing Inspection	Yes
Energy Inspection	Yes
Driveway Inspection	Yes
Sidewalks Inspection	No
Environmental Inspection	No
Landscaping Inspection	No
Tree Inspection	Yes
Water Tap Inspection	Yes
Sewer Tap Inspection	Yes
On Site Sewage Facility Inspection	No
Fire Inspection	No
Is there Auxiliary Water?	No
Auxiliary Water Inspection	No
Health Inspection	No
Usage Category	101
Hazardous Pipeline Review Required	No
Electric Service Planning Application Req'd?	Yes
ESPA Application Number	207-305 DRB
ESPA Approval Date	Jul 26, 2013
Site has Water availability?	Yes
Site has Waste Water availability?	Yes
Site has a septic system?	No
Maximum FAR allowed	2768
Total Number of Driveways	2

Driveway Width 1	12
Total Number of Sidewalks	1
Certificate of Occupancy to be Issued	Yes
Code Year	2006
Code Type	International Residential Code
Certified Applicant Type	No

PROPERTY DETAILS

Number	Pre.	Street	Street Type	Dir	Suite Type	Suite Number	City	State	Zip	Legal Desc
1710	E	18TH	STREET				AUSTIN	TX	78702	Lot: 3 Block: Subdivis SALINA ADDN

Lot: 3 Block: Subdivision: SALINA ADDN

PEOPLE DETAILS

Desc.	Organization Name	Address	City	State	Postal	Phone1
Applicant	18th Street (Jeffrey R Grier)	300 N LAMAR DR	AUSTIN	TX	78703	(210)710-5222

PROCESSES AND NOTES

Process Description	Status	Schedule Date	Start Date	End Date	Assigned Staff	# of Atten
Residential Intake	Closed	Jul 26, 2013	Jul 26, 2013	Jul 26, 2013	Natalia Rodriguez (512-769-5221)	
Plan Review Administration	Open					
Residential Zoning Review	Approved	Sep 4, 2013	Aug 1, 2013	Sep 6, 2013	Susan Barr	
Tree Ordinance Review	Closed		Jul 26, 2013	Jul 26, 2013	Jim Gobel (512-974-2639)	
Residential Revision After Issuance	Open	Sep 6, 2013				

FOLDER ATTACHMENT

Description Detail

View Attachments

Back

PAY ONLINE CALENDAR MEDIA CENTER FAQ CONTACT US SITE MAP LEGAL NOTICES PRIV

City of Austin
Residential Permit Application

Residential Review, 2nd floor, One Texas Center
505 Barton Springs, Austin, TX 78704
(512) 974-2747

For Departmental Use Only		
	PR # 13-077584	BP # 13-093666
	Assigned:	Due Date: 607
	Review Date:	Issue Date: 9/9/13
	Reviewed/Approved:	Issued:

Project Information

Project Address: 1710 E. 18TH ST 78702 | Tax Parcel ID: 0209090107

Legal Description: LOT 3 OUT 37 DIV B SALINA ADDN

Zoning District or PUD: SF-3-NP | Lot Size (square feet): 6,921 SF

Neighborhood Plan Area (if applicable): CENTRAL EAST AUSTIN | Historic District (if applicable):

Is this site within the Residential Design and Compatibility Standards Ordinance Boundary Area? Y [✓] N [ ]
Note: Boundaries are defined under Title 25-2 Subchapter F of the Land Development Code.

Does this site currently have water availability? Y [✓] N [ ] wastewater availability? Y [✓] N [ ]
If no, contact Austin Water Utility to apply for water/wastewater taps and/or service extension request.

Does this site have or will it have an auxiliary water source? Y [ ] N [✓] If yes, submit approved auxiliary and potable plumbing plans
(Auxiliary water supplies are wells, rainwater harvesting, river water, lake water, reclaimed water, etc.)

Does this site have a septic system? Y [ ] N [✓] If yes, submit a copy of approved septic permit to construct

Does this site require a cut or fill in excess of four (4) feet? Y [ ] N [✓]
If yes, contact the Development Assistance Center for a Site Plan Exemption.

Does this site front a paved street? Y [✓] N [ ] Is this site adjacent to a paved alley? Y [ ] N [✓]

Does this site have a Board of Adjustment (BOA) variance? Y [ ] N [✓] Case # _____ (if applicable)

Does this site have a Residential Design and Compatibility Commission (RDCC) waiver? Y [ ] N [✓]
If yes, provide a copy of decision sheet. **Note: A permit cannot be approved within 10 days of approval of a variance from BOA.**

Does the project impact a tree protected by ordinance? This includes canopy and/or critical root zone impacts to nearby trees.
Y [X] N [ ]
Note: If yes, application for a tree permit with the City Arborist may be required.

Is this site within one hundred-fifty (150) feet of the one hundred (100) year floodplain? Y [ ] N [✓]
Note: Proximity to a floodplain may require additional review time.

Description of Work

Existing Use: vacant [✓] single-family residential [ ] duplex residential [ ] two-family residential [ ] other _____

Proposed Use: vacant [ ] single-family residential [ ] duplex residential [ ] two-family residential [✓] other _____

Project Type: new construction [✓] addition [ ] addition/remodel [ ] remodel/repair [ ] other _____

# of bedrooms existing: — | # of bedrooms proposed: 3/2 | **# of baths existing:** — | # of baths proposed: 3/2

Will all or part of an existing exterior wall be removed as part of the project? Y [ ] N [✓]
Note: Removal of all or part of a structure requires a demolition permit.

Project Description: (Note: Please provide thorough description of project. Attach additional pages as necessary)

PRIMARY: NEW CONSTRUCTION PRIMARY DWELLING UNIT, TWO STORY WITH HABITABLE ATTIC EXEMPTION, FIRST FLOOR COVERED PORCH, FIRST FLOOR CARPORT, SECOND FLOOR UNCOVERED ROOFTOP DECK, THIRD FLOOR COVERED BALCONY

TWO-FAMILY: NEW CONSTRUCTION TWO-FAMILY DWELLING UNIT, TWO-STORY WITH FIRST FLOOR COVERED PORCH, SECOND FLOOR UNCOVERED ROOFTOP DECK

Trades Permits Required: electric [✓] plumbing [✓] mechanical (HVAC) [✓] concrete (right-of-way) [✓]

Job Valuation

Total Job Valuation: $ 200,000

Note: The total job valuation should be the sum total of all valuations noted to the right. Labor and materials only, rounded to nearest dollar. Permit fees are based on adopted fee schedule.

Portion of Total Job Valuation Dedicated to Addition/New Construction: $ 200,000
Bldg: $ 140,000 Elec: $ 20,000
Plmbg: $ 20,000 Mech: $ 20,000
Primary Structure: $ 120,000
Accessory Structure: $ 80,000

Portion of Total Job Valuation Dedicated to Remodel/Repair: $ _____
Bldg: $ _____ Elec: $ _____
Plmbg: $ _____ Mech: $ _____

Building and Site Area

Area Description Note: Provide a separate calculation for each distinct area. Attach additional sheets as necessary. Measurements are to the outside surface of the exterior wall.	1710 E. 1st ~~Existing Sq Ft~~ (UNIT A)	1800 SALINA New/Added Sq Ft (UNIT B)	Total Sq Ft
a) 1st floor conditioned area	858	574	1,432 +
b) 2nd floor conditioned area	968	276	1,244 +
c) 3rd floor conditioned area ATTIC EXEMPTION	648	182	830 +
d) Basement	—	—	— +
e) Covered Parking (garage or carport)	210	341	551 +
f) Covered Patio, Deck or Porch 231 102 /	231	102	333 +
g) Balcony	59	—	59 +
h) Other UNCOVERED ROOFTOP DECKS	311	162	473 +
Total Building Coverage (exclude b, c & d from total)			2316
i) Driveway	280	196	476
j) Sidewalks	71	71	142
k) Uncovered Patio /	—	—	—
l) Uncovered Wood Deck (counts at 50%)	—	—	—
m) AC pads	18	9	27
n) Other (Pool Coping, Retaining Walls)	—	—	—
Total Site Coverage			2961
o) Pool	—	—	—
p) Spa	—	—	—

Site Development Information

Building Coverage Information

Note: Building Coverage means the area of a lot covered by buildings or roofed areas, but excludes ground level paving, landscaping, open recreational facilities, incidental projecting eaves, balconies, and similar features. Pools, ponds, and fountains are not included in this measurement. (LDC 25-1-21)

Existing Building Coverage (sq ft): — % of lot size: —

Proposed Building Coverage (sq ft): 2316 % of lot size: 33.5 %

Impervious Cover Information

Note: Impervious cover is the total horizontal area of covered spaces, paved areas, walkways, and driveways. The term excludes pools, ponds, fountains, and areas with gravel placed over pervious surfaces that are used only for landscaping or by pedestrians. (LDC 25-1-23)

Existing Impervious Cover (sq ft): — % of lot size: —

Proposed Impervious Cover (sq ft): 2961 % of lot size: 42.8 %

Setbacks

Are any existing structures on this site a non-compliant structure based on a yard setback requirement? (LDC 25-2-513) Y [ ] N [✓]

Does any structure (or an element of a structure) extend over or beyond a required yard? (LDC 25-2-513) Y [ ] N [✓]

Is front yard setback averaging being utilized on this property? (LDC 25-2, Subchapter F, Sec. 2.3) Y [ ] N [✓]

Height Information (LDC 25-1-21 or 25-2 Subchapter F, Section 3.4)

Building Height: 30 ft Number of Floors: 2 + ATTIC

Parking (LDC 25-6 Appendix A & 25-6-478)

# of spaces required: 3 # of spaces provided: 3

Right-of-Way Information

Is a sidewalk required for the proposed construction? (LDC-6-353) EXISTING SIDEWALK Y [✓] N [ ]

***Sidewalks are to be installed on any new construction of a single family, two-family or duplex residential structure and any addition to an existing building that increases the building's gross floor area by 50 % or more.**

Will a Type I driveway approach be installed, relocated, removed or repaired as part of this project? Y [✓] N [ ]

Width of approach (measured at property line): 12 ft Distance from intersection (for corner lots only): 55/60 ft

Are storm sewer inlets located along the property or within ten (10) feet of the boundaries of the property? Y [ ] N [✓]

Gross Floor Area

This section is only required for projects located within the Residential Design and Compatibility Standards Ordinance Boundaries as defined and illustrated in Title 25-2 Subchapter F of the Land Development Code. The Gross Floor Area of each floor is measured as the area contained within the outside edge of the exterior walls.

1710 G.18th

1800 SAMINA

* NOTE: UNIT B: 850 SF

	~~Existing~~ (UNIT A)	New (UNIT B)	Exemption	Total	
1st Floor	858	574		1432	
2nd Floor	968	276		1244	
~~3rd Floor~~ ceilings >15'	67	—		67	
Basement	—	—	-	—	
Attic	648	182	830	0	
Garage (attached)	-			—	
(detached)		341	450	0	(DETACHED PARKING)
Carport (attached)	210		200	10	(ATTACHED PARKING)
(detached)					
Accessory building(s) (detached)					

TOTAL GROSS FLOOR AREA 2753

(Total Gross Floor Area /lot size) x 100 = 39.8 **Floor-To-Area Ratio (FAR)**

Is this project claiming a "parking area" exemption as described under Article 3?	Y ☑	N ☐
Is this project claiming a "ground floor porch" exemption as described under Article3?	Y ☑	N ☐
Is this project claiming a "basement" exemption as described under Article 3?	Y ☐	N ☑
Is this project claiming a "habitable attic" exemption as described under Article 3?	Y ☑	N ☐
Is a sidewall articulation required for this project?	Y ☐	N ☑
Does any portion of the structure extend beyond a setback plane?	Y ☐	N ☑

Parking Area exemption: Up to 450 square feet of a parking area may be deducted if it is a detached rear parking area that is separated from the principal structure by not less than 10 feet; or attached by a covered breezeway that is completely open on all sides, with a walkway not exceeding 6 feet in width and a roof not exceeding 8 feet in width; or a parking area that is open on two or more sides, if: it does not have habitable space above it; and the open sides are clear and unobstructed for at least 80% of the area measured below the top of the wall plate to the finished floor of the carport. Up to 200 square feet may be deducted if it is an attached parking area used to meet the minimum parking requirement; or a garage that is less than 10 feet from the rear of the principal structure, provided that the garage is either detached from the principal structure; or attached by a covered breezeway that is completely open on all sides, with a walkway not exceeding 6 feet in width and a roof not exceeding 8 feet in width. An applicant may receive only one 450-square foot exemption per site under Article 3. An applicant who receives a 450-square foot exemption may receive an additional 200-foot exemption for the same site under Article 3, but only for an attached parking area used to meet minimum parking requirements.

Ground Floor Porch exemption: A ground floor porch, including a screened porch, may be exempted, provided that the porch is not accessible by automobile and is not connected to a driveway; and the exemption may not exceed 200 square feet if a porch has habitable space or a balcony above it.

Basement exemption: A habitable portion of a building that is below grade may be exempted if the habitable portion does not extend beyond the first-story footprint and is below natural or finished grade, whichever is lower; and it is surrounded by natural grade for at least 50% of its perimeter wall area and the finished floor of the first story is not more than three feet above the average elevation at the intersections of the minimum front yard setback line and the side property lines.

Habitable Attic exemption: A habitable portion of an attic may be exempted if: 1. The roof above it is not a flat or mansard roof and has a slope of 3 to 12 or greater; 2. It is fully contained within the roof structure; 3. It has only one floor; 4. It does not extend beyond the footprint of the floors below; 5. It is the highest habitable portion of the building, or a section of the building, and adds no additional mass to the structure; and 6. Fifty percent or more of the area has a ceiling height of seven feet or less.

Contact Information

Owner	ME1 Investments (Murray Erickson)	Applicant or Agent	Jeffrey Grier
Mailing Address	47 Hunters Trail New Braunfels TX 78132	Mailing Address	351 Inspiration Dr. New Braunfels TX 78130
Phone	(432) 528 0964	Phone	210 710-5222
Email	Lucky5306@gmail.com	Email	jgrierbuilder@gmail.com
Fax		Fax	
General Contractor	Guardian Custom Builders	Design Professional	EAST SIDE MOD DESIGN
Mailing Address	2931 E. 12th St. Austin TX. 78702	Mailing Address	1000 E. CESAR CHAVEZ AUSTIN TX 78702
Phone	(210) 710-5222	Phone	512-947-7754
Email	jgrierbuilder@gmail.com	Email	rob@eastsidemod.com
Fax		Fax	

Acknowledgments

Is this site registered as the owner's homestead for the current tax year with the appraisal district? Y [ ] N [U]

I understand that in accordance with Sections 25-1-411 and 25-11-66 of the Land Development Code (LDC), non-compliance with the LDC may be cause for the Building Official to suspend or revoke a permit and/or license.

I understand that I am responsible for complying with any subdivision notes, restrictive covenants and/or zoning conditional overlays prohibiting certain uses and/or requiring certain development restrictions (i.e., height, access, screening, etc.) on this property.

If a conflict should result with any of these restrictions, it will be my responsibility to resolve it. I understand that, if requested, I must provide copies of all subdivision plat notes, restrictive covenants, and/or zoning conditional overlay information that may apply to this property.

I acknowledge that this project qualifies for the Site Plan Exemption as listed in Section 25-5-2 of the LDC. I understand that nothing may be built upon or over an easement.

I further understand that no portion of any roof structure may overhang in any public utility or drainage easement. I acknowledge that customer will bear the expense of any necessary relocation of existing utilities to clear this driveway location and/or the cost to repair any damage to existing utilities caused during construction.

I agree that this application will expire on the 181st day after the date that the application is filed if the application is not approved and an extension is not granted. If the application expires, a new submittal will be required and compliance with current code may be required.

I hereby certify that to the best of my knowledge and ability, the information provided in this application is complete and accurate.

I further acknowledge that, should any information contained herein prove incorrect, the building official may suspend or revoke any resulting permit and/or license.

I also understand that if there are any trees greater than 19 inches in diameter located on the property and immediately adjacent to the site, I am required to complete a Tree Ordinance Review Application by contacting (512) 974-1876 or cityarborist@austintexas.gov. This initiates the tree permitting requirement needed to proceed with the development review process.

Erosion and Sedimentation Controls are required per Section 25-8-181.

I acknowledge that a sidewalk will be required on any new construction of a single family, two-family or duplex residential structure and any addition to an existing building that increases the building's gross floor area by 50 % or more.

I acknowledge if my plans are subject to a technical review it will not be construed to be a permit for, or an approval of any violation of any of the provisions of the current adopted building codes or another ordinance of the City of Austin.

Applicant's signature: Jeff Grier Date:

OWNER'S AUTHORIZATION LETTER

I/we hereby certify that I/we am/are the owner(s) of the property referenced below. I/we am/are respectfully requesting processing and approval of the below referenced permit(s) review. I/we hereby authorize the Applicant listed on this application to act on my/our behalf during the processing and presentation of this request. They shall be the principal contact with the City in processing this application.

Authorized Agent's Name: Jeffrey Grier
Property Address: 1710 E. 18th st. Austin TX. 78702
PR#:

Owner's Signature 7-15-13
Date

Murray Erickson
Owner's Printed Name

Sworn and subscribed before me this 12 day of July, 2013

Signature of Notary

JENNIFFER RODRIGUEZ
NOTARY PUBLIC
STATE OF TEXAS
EXPIRES
03/01/2015

FILED
In the Office of the
Secretary of State of Texas

FEB 14 2012

Corporations Section

CERTIFICATE OF FORMATION OF ME1 INVESTMENTS, LP A LIMITED PARTNERSHIP

This certificate of formation is submitted for filing pursuant to the applicable provisions of the Texas Business Organizations Code.

Article I - Entity Name and Type

The name and type of filing entity being formed are: **ME1 INVESTMENTS, LP**, a Texas limited partnership (hereinafter "Limited Partnership").

Article II - Registered Agent and Registered Office

The initial registered agent is an individual resident of the state whose name is Murray Erickson. The business address of the initial registered agent and the initial registered office is: 18382 FM 306, Canyon Lake, Texas 78133.

Article III - Governing Authority

The name, mailing address, and street address of the business or residence of each general partner are set forth below:

Name	Mailing Address	Street Address
ME1 MANAGEMENT, INC.	18382 FM 306 Canyon Lake, TX. 78133	18382 FM 306 Canyon Lake, TX. 78133

Article IV - Principal Office

The address of the principal office of the limited partnership in the United States where records are to be kept or made available under section 153.551 of the Texas Business Organizations Code is: 18382 FM 306, Canyon Lake, Texas 78133.

Article V - Effective Date of Filing

This certificate of formation becomes effective when the document is filed by the secretary of state.

This document is signed subject to the penalties imposed by law for the submission of a materially false or fraudulent instrument.

Date: February 13, 2012.

ME1 INVESTMENTS, LP
By: **ME1 MANAGEMENT, INC.**
General Partner

By:
Murray Erickson, President