B2/1

CASE # 2014-083741
PLAN REVIEW # _____

APPLICATION TO THE RESIDENTIAL DESIGN AND COMPATIBILITY COMMISSION (RDCC)

GENERAL MODIFICATION WAIVER

APPLICANT: Amanda and Austin Davidson

AUTHORIZED AGENT (if applicable): _____

STREET ADDRESS: 1803 Clifford Ave., Austin TX 78702

LEGAL DESCRIPTION: Subdivision – Henry Ulits Addition

Lot(s) 15 Block _____ Outlot 28 Division B

ZONING DISTRICT AND NEIGHBORHOOD PLAN: SF-3-NP (ROSEWOOD)

LAND STATUS DETERMINATION CASE NUMBER (if applicable) C8I-2014-0002

REQUEST: up to 25% increase in one or more of the following:

- ☑ Maximum Floor to area ratio .4 or gross floor area >2300 sq ft.
- ☐ Maximum Linear feet of Gables protruding from setback plane
- ☐ Maximum Linear feet of Dormers protruding from the setback plane

Waive or modify the side wall articulation requirement of Section 2.7.

- ☑ Side Wall Length Articulation

Please briefly and thoroughly

We are requesting an increase to our allowable FAR by 266sqft (11.57%) in order to maintain our first floor covered porch and lowering second floor study floor by 1ft 6inch to allow for more head room (cieling/roof height does not change). Also add first floor awning to articulated space to cover portion of deck.

Note: Certificate of Appropriateness: H (Historic) or HD (Historic Designation) – case goes to RDCC first. National Register Historical District (NRHD) Overlay: without H or HD - case goes to Historic Landmark Commission first.

B2/2

APPLICATION TO THE RESIDENTIAL DESIGN AND COMPATIBILITY COMMISSION (RDCC)

GENERAL MODIFICATION WAIVER

DESIGN GUIDELINE CONSIDERATIONS:

1. Are there any recommendations from the neighborhood plan team for this development?

The Owners are meeting with the Neighborhood team on the Sep 9th

2. Does the development:

a. Comply with the neighborhood design guidelines, if any

Please see attached document

b. Provide consistency with the streetscape of the properties in the vicinity

Please see attached document

c. Provide consistency with the massing, scale and proximity of structures located on either side of or behind the development

Please see attached document

B2/3

d. Impact the privacy of adjacent rear yards

Please see attached document

e. Impact the topography or lot shape

Please see attached document

3. For a development of an entire block, will the development have a negative impact on the adjacent property?

Not applicable

B2/4

RDCC APPLICATION: 1803 Clifford Avenue

DESIGN GUIDELINE CONSIDERATIONS:

1. Are there any recommendations from the neighborhood plan team for this development?

The Davidson's (Owners) have not met with the Neighborhood Committee prior to submitting this document. They will be meeting with them prior to the October meeting and will relay information / documentation at that point.

2. Does the development:

a. Comply with the neighborhood design guidelines, if any

Yes. The proposed home is consistent with Rosewood's Neighborhood Plan.

The Owner's subdivided their lot which sits between Clifford Ave. and Sanchez St. The property has a historic house located on the Sanchez side which the Owners have renovated to maintain the historic character of the house.

The Clifford side of the lot was undeveloped except for a large dilapidated shed structure. By developing this portion of the lot the Owners are meeting many goals of the neighborhood plan, namely to make the neighborhood more attractive, cleaner and safer, by reducing the number of vacant lots in the neighborhood and by enhancing the character of the neighborhood with a new modern farmhouse residence.

So that the new structure does not dominate the lot or the street, the new structure is sited such that most of the house runs along one side of the property and along the back of the lot; allowing for a large open space at the front of the lot and a small front façade along the street. The pitched roof and proposed cedar siding are indicative of surrounding homes' material palettes and forms.

b. Provide consistency with the streetscape of the properties in the vicinity?

The house is only two stories tall reaching a maximum height of 26'-4" above the average adjacent grade. While many houses in the area are single story homes, many are two stories or more in height. As mentioned above we feel the overall form, massing and material palette are consistent with the surrounding homes, both old and new. We feel this house is more in line with the historic homes of the neighborhood, though with a slightly modern take. Directly across the street are 3 "Dwell Homes" which are similar in character to the subject home though slightly more modern.

c. Provide consistency with massing, scale, and proximity of structures located on either side of or behind the development?

The back of the house is sunk over 4' into the earth so as to reduce the overall height of the building. As mentioned above we placed most of the house along the back and to one side of the property as not to overwhelm the street and to allow for ample green space in the front - a place for neighbors to gather. The house behind this one is a single story structure though because of the slope of the lot it sits about as tall as this house. To the left is an older single story house, which has "room to breathe" as this is the

side of the subject lot without a structure on it. The house to the right is a new two story home, similar in height, though its form is a more traditional box located near the front of the lot.

d. Impact the privacy of adjacent rear yards?

No. Special attention was paid to reduce or block site lines to and from the new house in order to protect privacy for the lots directly to the north, south and west. All windows were carefully located to block views to, and from, these neighboring yards while providing ample light for the interior of the proposed development. The massing, program and siting of the house further protects privacy of the adjacent yards.

d. Impact the topography or lot shape?

Yes. We are cutting the site down at the back of the lot to reduce the overall height of the building and infilling the front side yard to create a level yard.

2. For a development of an entire block, will the development have a negative impact on the adjacent property?

No. This question is not applicable for this project.

B2/6

APPLICANT CERTIFICATE – I affirm that my statements contained in the complete application are true and correct to the best of my knowledge and belief.

Mailing Address 1802 Sanchez St.

City, State Austin, TX Zip 78702

Phone 512-698-2987 Printed Name AUSTIN DAVIDSON AMANDA DAVIDSON

Signature Date 9/9/14

OWNER'S CERTIFICATE – I affirm that my statements contained in the complete application are true and correct to the best of my knowledge and belief.

Mailing Address 1802 Sanchez St.

City, State Austin, TX Zip 78702

Phone 512-698-2987 Printed Name AUSTIN DAVIDSON AMANDA DAVIDSON

Signature Date 9/9/14

GENERAL INFORMATION FOR SUBMITTAL OF A MODICATION REQUEST TO THE RESIDENTIAL DESIGN AND COMPATIBILITY COMMISSION

B2/7

City of Austin Residential Permit Application

Residential Review, 2nd floor, One Texas Center
505 Barton Springs, Austin, TX 78704
(512) 978-4000

Project Information

Project Address: 1803 Clifford Ave, Austin, Tx, 78702 | Tax Parcel ID: 838764

Legal Description: 0.1121A OF LOT 15 OLT 28 DIVISION B

Zoning District or PUD: SF3-NP | Lot Size (square feet): 4885sqft

Neighborhood Plan Area (if applicable): Rosewood | Historic District (if applicable):

Is this site within the Residential Design and Compatibility Standards Ordinance Boundary Area? ☑Y ☐N
Note: Boundaries are defined under Title 25-2 Subchapter F of the Land Development Code.

Does this site currently have water availability? ☑Y ☐N wastewater availability? ☑Y ☐N
If no, contact Austin Water Utility to apply for water/wastewater taps and/or service extension request.

Does this site have or will it have an auxiliary water source? ☐Y ☑N If yes, submit approved auxiliary and potable plumbing plans
(Auxiliary water supplies are wells, rainwater harvesting, river water, lake water, reclaimed water, etc.)

Does this site have a septic system? ☐Y ☑N If yes, submit a copy of approved septic permit to construct

Does this site require a cut or fill in excess of four (4) feet? ☑Y ☐N
If yes, contact the Development Assistance Center for a Site Plan Exemption.

Does this site front a paved street? ☑Y ☐N | Is this site adjacent to a paved alley? ☐Y ☑N

Does this site have a Board of Adjustment (BOA) variance? ☐Y ☑N Case #_____ (if applicable)

Does this site have a Residential Design and Compatibility Commission (RDCC) waiver? ☐Y ☑N
If yes, provide a copy of decision sheet. **Note: A permit cannot be approved within 10 days of approval of a variance from BOA.**

Does the project impact a tree protected by ordinance? This includes canopy and/or critical root zone impacts to nearby trees. ☐Y ☑N
Note: If yes, application for a tree permit with the City Arborist may be required.

Is this site within one hundred-fifty (150) feet of the one hundred (100) year floodplain? ☐Y ☑N
Note: Proximity to a floodplain may require additional review time.

Description of Work

Existing Use: ☑vacant ☐single-family residential ☐duplex residential ☐two-family residential other_____

Proposed Use: ☐vacant ☑single-family residential ☐duplex residential ☐two-family residential other_____

Project Type: ☑new construction ☐addition ☐addition/remodel ☐remodel/repair other_____

# of existing bedrooms: N/A | # of bedrooms upon completion: 5 | # of existing baths: N/A | # of baths upon completion: 4

Will all or part of an existing exterior wall be removed as part of the project? ☐Y ☑N
Note: Removal of all or part of a structure requires a demolition permit.

Project Description: (Note: Please provide thorough description of project. Attach additional pages as necessary)
This is a new 2,298 sq ft, 2-story single family home on a vacant lot in east Austin. We are combining a traditional high-pitched gable roof and and wood siding with clean conservative modern details, such as: a cantilevered canopy, select steel framing in places and board form concrete retaining walls.

Trades Permits Required: ☑electric ☑plumbing ☑mechanical (HVAC) ☑concrete (right-of-way)
(circle all that apply)

Job Valuation

Total Job Valuation: $ 200000

Note: The total job valuation should be the sum total of all valuations noted to the right. Labor and materials only, rounded to nearest dollar. Permit fees are based on adopted fee schedule.

Portion of Total Job Valuation Dedicated to Addition/New Construction: $ 200000
Bldg: $ 100000 Elec: $ 25000
Plmbg: $ 15000 Mech: $ 15000
Primary Structure: $ 45000
Accessory Structure: $

Portion of Total Job Valuation Dedicated to Remodel/Repair: $_____
Bldg: $_____ Elec: $_____
Plmbg: $_____ Mech: $_____

RECEIVED B/8

ref sheet BP.1 calc + notes			Building and Site Area
Area Description Note: Provide a separate calculation for each distinct area. Attach additional sheets as necessary. Measurements are to the outside surface of the exterior wall.	**Existing Sq Ft**	**New/Added Sq Ft**	**Total Sq Ft**
a) 1st floor conditioned area	-	1105	1105
b) 2nd floor conditioned area	-	1254	1254
c) 3rd floor conditioned area	-	-	
d) Basement	-	-	
e) Covered Parking (garage or carport)	-	-	
f) Covered Patio, Deck or Porch — awning + 2nd floor cov. deck	-	263	263
g) Balcony	-	-	
h) Other — ref BP.1 for break down	-	544	544
i) Uncovered Wood Deck	-	-	
Total Gross Building Area (total A through I)	-	3166	3166
j) Pool	-	-	
k) Spa	-	-	

Site Development Information

Building Coverage Information

Note: Building Coverage means the area of a lot covered by buildings or roofed areas, but excludes ground level paving, landscaping, open recreational facilities, incidental projecting eaves, balconies, and similar features. Pools, ponds, and fountains are not included in this measurement. (LDC 25-1-21)

Total Building Coverage (sq ft): 1,580 % of lot size: 32% Ref BP.1 for details

Impervious Cover Information

Note: Impervious cover is the total horizontal area of covered spaces, paved areas, walkways, and driveways. The term excludes pools, ponds, fountains, and areas with gravel placed over pervious surfaces that are used only for landscaping or by pedestrians. For an uncovered wood deck that has drainage spaces between the deck boards and that is located over a pervious surface, 50 percent of the horizontal area of the deck is included in the measurement of impervious cover. (LDC 25-1-23)

Total Impervious Cover (sq ft): 2,124 % of lot size: 43%

Setbacks

Are any existing structures on this site a non-compliant structure based on a yard setback requirement? (LDC 25-2-513) ☐ Y ☑ N

Does any structure (or an element of a structure) extend over or beyond a required yard? (LDC 25-2-513) ☑ Y ☐ N — front porch ok per LDC 25-2-1602

Is front yard setback averaging being utilized on this property? (LDC 25-2, Subchapter F, Sec. 2.3) ☐ Y ☑ N

Height Information (LDC 25-1-21 or 25-2 Subchapter F, Section 3.4)

Building Height: 23'5" ft Number of Floors: 2

Parking (LDC 25-6 Appendix A & 25-6-478)

# of spaces required: 2 # of spaces provided: 2

Right-of-Way Information

Is a sidewalk required for the proposed construction? (LDC-6-353) side walk already exists ☑ Y ☐ N

***Sidewalks are to be installed on any new construction of a single family, two-family or duplex residential structure and any addition to an existing building that increases the building's gross floor area by 50 % or more.**

Will a Type I driveway approach be installed, relocated, removed or repaired as part of this project? ☑ Y ☐ N

Width of approach (measured at property line): 20 ft Distance from intersection (for corner lots only): _____ ft

Are storm sewer inlets located along the property or within ten (10) feet of the boundaries of the property? ☐ Y ☑ N

B2/9

Subchapter F – 'McMansion'

Gross Floor Area

This section is only required for projects located within the Residential Design and Compatibility Standards Ordinance Boundaries as defined and illustrated in Title 25-2 Subchapter F of the Land Development Code. The Gross Floor Area of each floor is measured as the area contained within the outside edge of the exterior walls. Areas with ceiling height over 15 feet are counted twice.

	Existing	New	Exemption	Total
1st Floor	-	1105		1105
2nd Floor	-	1193		1193
3rd Floor	-	-		-
Basement	-	-	-	-
Attic	-	-	-	-
Garage (attached)	-	-	-	-
(detached)	-	-	-	-
Carport (attached)	-	-	-	-
(detached)	-	-	-	-
Accessory building(s) (detached)	-	-		-
Ceilings over 15 ft	-	-		-

TOTAL GROSS FLOOR AREA 2298

Note: Small Lot @ 4885Sqft - 2300 GFA allowed

(Total Gross Floor Area /lot size) = 47% **Floor-To-Area Ratio (FAR)**

Is this project claiming a "parking area" exemption as described under Article 3?	☐ Y	☑ N
Is this project claiming a "ground floor porch" exemption as described under Article3?	☑ Y	☐ N
Is this project claiming a "basement" exemption as described under Article 3?	☐ Y	☑ N
Is this project claiming a "habitable attic" exemption as described under Article 3?	☐ Y	☑ N
Is a sidewall articulation required for this project?	☑ Y	☐ N
Does any portion of the structure extend beyond a setback plane?	☑ Y	☐ N front porch
Are any ceilings over 15 feet in height?	☐ Y	☑ N

Parking Area exemption: Up to 450 square feet of a parking area may be deducted if it is a detached rear parking area that is separated from the principal structure by not less than 10 feet; or attached by a covered breezeway that is completely open on all sides, with a walkway not exceeding 6 feet in width and a roof not exceeding 8 feet in width; or a parking area that is open on two or more sides, if: it does not have habitable space above it; and the open sides are clear and unobstructed for at least 80% of the area measured below the top of the wall plate to the finished floor of the carport. Up to 200 square feet may be deducted if it is an attached parking area used to meet the minimum parking requirement; or a garage that is less than 10 feet from the rear of the principal structure, provided that the garage is either detached from the principal structure; or attached by a covered breezeway that is completely open on all sides, with a walkway not exceeding 6 feet in width and a roof not exceeding 8 feet in width. An applicant may receive only one 450-square foot exemption per site under Article 3. An applicant who receives a 450-square foot exemption may receive an additional 200-foot exemption for the same site under Article 3, but only for an attached parking area used to meet minimum parking requirements.

Ground Floor Porch exemption: A ground floor porch, including a screened porch, may be exempted, provided that the porch is not accessible by automobile and is not connected to a driveway; and the exemption may not exceed 200 square feet if a porch has habitable space or a balcony above it.

Basement exemption: A habitable portion of a building that is below grade may be exempted if the habitable portion does not extend beyond the first-story footprint and is below natural or finished grade, whichever is lower; and it is surrounded by natural grade for at least 50% of its perimeter wall area and the finished floor of the first story is not more than three feet above the average elevation at the intersections of the minimum front yard setback line and the side property lines.

Habitable Attic exemption: A habitable portion of an attic may be exempted if: 1. The roof above it is not a flat or mansard roof and has a slope of 3 to 12 or greater; 2. It is fully contained within the roof structure; 3. It has only one floor; 4. It does not extend beyond the footprint of the floors below; 5. It is the highest habitable portion of the building, or a section of the building, and adds no additional mass to the structure; and 6. Fifty percent or more of the area has a ceiling height of seven feet or less.

B2/10

Contact Information

Owner	Graham and Amanda Davidson	Applicant or Agent	Amanda Davison
Mailing Address	1802 Sanchez Street, Austin, TX 78702	Mailing Address	1802 Sanchez Street, Austin, TX 78702
Phone	512-698-2987	Phone	512-698-2987
Email	acleggett@gmail.com	Email	acleggett@gmail.com
Fax		Fax	
General Contractor	Mills Group - Amanda Davidson	Design Professional	Arbib Hughey Design
Mailing Address	1802 Sanchez Street, Austin,TX 78702	Mailing Address	2235 East 6th Street, #104, Austin, TX 78702
Phone	512-698-2987	Phone	512-362-8878
Email	acleggett@gmail.com	Email	ben@arbibhughey.com
Fax		Fax	

Acknowledgments

Is this site registered as the owner's homestead for the current tax year with the appraisal district? ☑ Y ☐ N

I understand that in accordance with Sections 25-1-411 and 25-11-66 of the Land Development Code (LDC), non-compliance with the LDC may be cause for the Building Official to suspend or revoke a permit and/or license.

I understand that I am responsible for complying with any subdivision notes, restrictive covenants and/or zoning conditional overlays prohibiting certain uses and/or requiring certain development restrictions (i.e., height, access, screening, etc.) on this property.

If a conflict should result with any of these restrictions, it will be my responsibility to resolve it. I understand that, if requested, I must provide copies of all subdivision plat notes, restrictive covenants, and/or zoning conditional overlay information that may apply to this property.

I acknowledge that this project qualifies for the Site Plan Exemption as listed in Section 25-5-2 of the LDC. I understand that nothing may be built upon or over an easement.

I further understand that no portion of any roof structure may overhang in any public utility or drainage easement. I acknowledge that customer will bear the expense of any necessary relocation of existing utilities to clear this driveway location and/or the cost to repair any damage to existing utilities caused during construction.

I agree that this application will expire on the 181st day after the date that the application is filed if the application is not approved and an extension is not granted. If the application expires, a new submittal will be required and compliance with current code may be required.

I hereby certify that to the best of my knowledge and ability, the information provided in this application is complete and accurate.

I further acknowledge that, should any information contained herein prove incorrect, the building official may suspend or revoke any resulting permit and/or license.

I also understand that if there are any trees greater than 19 inches in diameter located on the property and immediately adjacent to the site, I am required to complete a Tree Ordinance Review Application by contacting (512) 974-1876 or cityarborist@austintexas.gov. This initiates the tree permitting requirement needed to proceed with the development review process.

Erosion and Sedimentation Controls are required per Section 25-8-181.

I acknowledge that a sidewalk will be required on any new construction of a single family, two-family or duplex residential structure and any addition to an existing building that increases the building's gross floor area by 50 % or more.

I acknowledge if my plans are subject to a technical review it will not be construed to be a permit for, or an approval of any violation of any of the provisions of the current adopted building codes or another ordinance of the City of Austin.

Applicant's signature: _____ Date: 7/8/14

Design Professional's signature: _____ Date: 7/8/2014

B2/11

Austin WATER

Austin Water Utility

Water & Wastewater Service Plan Verification (WWWSPV)

Service Address: 1803 CLIFFORD AVENUE, AUSTIN, TX 78702

Lot: 15 Block: OLT 28 Subdivision: DIVISION B

Existing Use: (Vacant) Single-Family Res. Duplex Garage Apt. Other

Proposed Use: 2nd Structure (Single-Family Res.) Duplex Garage Apt. Other

Existing # Baths 0 Additional # Baths 4 Total number of bathrooms the meter will feed 4

AMANDA DAVIDSON, BUILDER/HOME OWNER — 8/7/14 — 512-698-2987

Applicant's Name & Title — Date — Phone

City of Austin Office Use

Water main size 6" CI Service stub size 3/4" Service stub upgrade required: Yes (No)

Existing meter # N/a Existing meter size N/A Upgrade required: Y (N) New meter size 3/4"

Existing water service line/meter location 26' L/RL

WW main size 6" WW Service line/clean-out location profile # 1977

AWU Pipeline Engineering approval required: Yes No

Comments: TWISTS 1st SVC-TO-MAIN / PT for W/WW

AWU Engineer Representative — Date — Phone

AWU Taps Representative — 8/7/2014 — 972-0011

Water meters & wastewater clean-outs are not permitted in sidewalks or driveways.

Relocation of services necessary to remove them from proposed sidewalks or driveways shall be performed at the applicant's expense.

If the existing water meter was pulled for demolition, apply for a new building permit or contact Customer Care at 512-494-9400 to have the same size meter reinstalled within 120 days of meter removal to avoid city connect charges being applied.

REVIEWED AUG 07 2014 AUSTIN WATER UTILITY CONSUMER SERVICE DIVISION - TAPS

Verification expires 180 days after date of submittal

B2/12

One Stop Shop
505 Barton Springs Rd
(512) 974-2632 – phone
(512) 974-9112 – phone
(512) 974-9109 – fax
(512) 974-9779 – fax

Austin Energy
Building Service Planning Application (BSPA)

This form to be used for review of Building Permit only

Responsible Person for Service Request Amanda Davidson

Email acleggett@gmail.com Fax --- Phone 512-698-2987

☑ Residential ☐ Commercial ☑ New Construction ☐ Remodeling

Project Address 1803 Clifford Ave, Austin TX 78702 **OR**

Legal Description _____ Lot _____ Block _____

Who is your electrical provider? ☑ AE ☐ Other _____

☑ Overhead Service ☐ Underground Service ☑ Single-phase (1Ø) ☐ Three-phase (3Ø)

Location of meter n/a

Number of existing meters on gutter 0 (show all existing meters on riser diagram)

Expired permit # _____

Comments New electrical service for new construction

AMANDA DAVIDSON 8/7/2014 512-698-2987
ESPA Completed by (Signature & Print Name) Date Phone

_____ Approved ☐ Yes ☐ No _____
AE Representative Date Phone

Application expires 180 days after the date of approval
(Any change to the above information requires a new ESPA)

AE APPROVED
AUG 08 2014
220.307
DRB

All structures etc. must maintain 7'5" clearance from AE energized power lines. Enforced by AE & NESC codes.

Revised 2/14/2012

2/3

DRAWING SHEET INDEX

DAVIDSON RESIDENCE

CITY OF AUSTIN BUILDING PERMIT SET
SUBMIT DATE: AUGUST 4TH, 2014

OWNER

Amanda & Graham Davidson

1802 Sanchez Street
Austin, TX 78702
512.698.2987 [c]

PROJECT LOCATION

1803 Clifford Ave.
Austin, Texas 78702

ARCHITECT

ARBIB HUGHEY DESIGN

2235 E. 6th St. #104
Austin, Texas 78702
512.417.9650

GENERAL CONTRACTOR

Amanda Davidson
Mills Group / FPT, LLC

1802 Sanchez Street
Austin, TX 78702
512.698.2987 [c]

STRUCTURAL ENGINEER

LEAPI STRUCTURES

3001 S. Lamar Blvd., Suite A-230
Austin, Texas 78704-8863
512.298.3999

ARBIB HUGHEY DESIGN

2/2

GENERAL SITE INFORMATION
Lot Size: 4885 SQ.FT.
Zoning Designation: SF-3-NP (ROSEWOOD)
Subchapter F Boundary: Applicable
Historic Designation: Does Not Require Review
Protected Trees: No - per survey dated 02/25/2014

SITE DEVELOPMENT INFORMATION			
BUILDING COVERAGE INFORMATION			
Existing Building Coverage (Sq.Ft.):	0	% of Lot Size:	00.00 %
Proposed Building Coverage (Sq.Ft.):	1,560	% of Lot Size:	32 % — 1st Floor + 2nd Floor Overhangs (@ 303 sf) + Awning (@172 sf)
IMPERVIOUS COVER INFORMATION			
Existing Impervious Coverage (Sq.Ft.):	0.0	% of Lot Size	00.00 %
Proposed Impervious Coverage (Sq.Ft.):	2,124	% of Lot Size:	43 % — Building Coverage + Other Listed Below
SETBACKS			
Are any existing structures on this site a non-compliant structure based on the yard setback requirement?		NO	ALLOWED FRONT PORCH EXTENSION PER LDC 25-2-1602
Does any structure (or any part of a structure) extend over or beyond a required yard?		YES	
Is front yard setback averaging being utilized on the property?		NO	
HEIGHT INFORMATION		PARKING	
Building Height: 23'-0"	Number of Floors: 2	# of spaces required: 2	# of spaces provided: 2

AREA DESCRIPTION	EXISTING SQ.FT.	NEW ADDED SQ.FT.	TOTAL SQ.FT.
a) 1st floor conditioned area	--	1,105	1,105
b) 2nd floor conditioned area	--	1,254	1,254
c) 3rd floor conditioned area	--	--	--
d) Basement	--	--	--
e) Covered Parking (garage or carport)	--	--	--
f) Covered Patio, Deck or Porch (Awning & Second Floor Covered Deck)	--	263	263
g) Balcony	--	--	--
h) Other (sum items f + g below)	--	544	544
i) Uncovered Wood Deck	--	--	--
Total Gross Building Area (Total A through i)		3,166	3,166
j) Pool	--	--	--
k) Spa	--	--	--
l) Other	--	--	--
m) Residence Walk	--	135	135
n) Driveway	--	216	216
o) AC pads	--	32	32
p) First Floor Deck at 100%	--	87	87
q) Uncovered Concrete Walkways & Steps	--	34	34

GROSS FLOOR AREA

	Existing	New	Exemption	Total
1st Floor	--	1,105		1,105
2nd Floor	--	1,193		1,193
3rd Floor	--	--	--	--
Basement	--	--	--	--
Attic	--	--	--	--
Garage (attached)	--	--	--	--
(detached)	--	--	--	--
Carport (attached)	--	--	--	--
(detached)	--	--	--	--
Accessory Building(s) (detached)	--	--	--	--

(1193 — FLOOR AREA UNDER 5' IN HEIGHT (IN UPSTAIRS STUDY) NOT INCLUDED, REF. SHEET BP.3)

TOTAL GROSS FLOOR AREA: 2,298

47% Floor-To-Area Ratio (FAR) (Total Gross Floor Area / Lot Size) x 100 =

NOTE: LOT SIZE = 4,885 SF; 2,300 SF FAR ALLOWED PER LDC 25-2-1

Is this project claiming a parking area exemption as described under Article 3?	NO
Is this project claiming a ground floor porch exemption as described under Article 3?	YES
Is this project claiming a basement exemption as described under Article 3?	NO
Is this project claiming a habitable attic exemption as described under Article 3?	NO
Is a sidewalk articulation required for this project?	YES
Does any portion of the structure extend beyond the setback plane?	YES - EXEMPTION PER LDC 25-2-1602

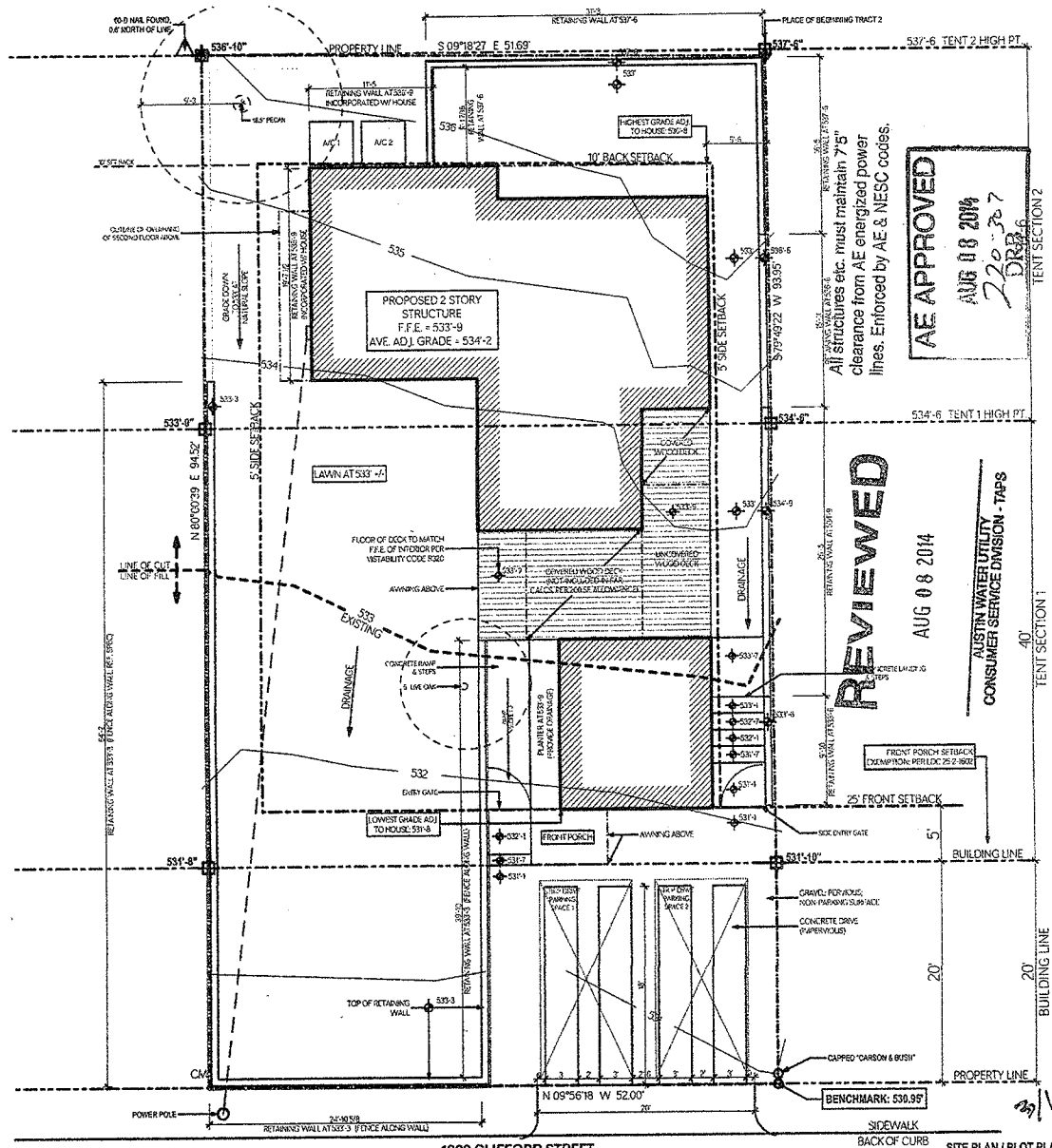

1803 CLIFFORD STREET

SITE PLAN / PLOT PLAN 1

SCALE 1" = 1'-0"

LEGAL DESCRIPTION

BEING 0.11 ACRE, MORE OR LESS, OUT OF OUTLOT 28, DIVISION B, IN THE CITY OF AUSTIN, TRAVIS COUNTY, TEXAS, AND BEING PART OF LOT 15 OF AN UNRECORDED SUBDIVISION KNOWN AS HENRY ULIT'S ADDITION, AND BEING ALL OF THAT CERTAIN 52.25' BY 104.5' TRACT OF LAND DESCRIBED IN A DEED TO CORINNE BUTLER HARRIS RECORDED IN VOLUME 3572, PAGE 1215 OF THE TRAVIS COUNTY DEED RECORDS (TCDR) SAVE AND EXCEPT THAT CERTAIN 10' BY 52.25' STRIP OF LAND DESCRIBED IN A STREET DEED RECORDED IN VOLUME 5050, PAGE 622 OF THE TCDR.

ARBIB HUGHEY DESIGN
2235 E. 6TH ST. #104 AUSTIN, TX 78702

project info:

project name: DAVIDSON RESIDENCE

physical location: 1803 CLIFFORD STREET AUSTIN, TEXAS 78702

owners: Amanda & Graham Davidson, 1802 Sanchez Street, Austin, TX 78702, 512.698.2987

contractor: Amanda Davidson, Mills Group / FPT, LLC, 1802 Sanchez Street, Austin, TX 78702, 512.698.2987

engineer: LEAP/STRUCTURES, 3001 S. Lamar Blvd., Suite A-230, Austin, TX 78704-6863, 512.258-3999

phase info:

set title: CoA Building Permit Set

date submitted: 2014.08.04

REGISTERED ARCHITECT EDWARD W. HUGHEY 22264 STATE OF TEXAS

UNLESS SIGNED AND SEALED BY THE ARCHITECT, THESE DRAWINGS MAY NOT BE USED FOR REGULATORY APPROVAL, PERMITTING, OR CONSTRUCTION.

drawing info:

SITE PLAN & CALCULATIONS

BP.1

2/15

R320.2 VISITABILITY REQUIREMENTS:
The requirements of this section are required for this new construction and shall comply with the following sections:

A.1. **R320.3 Visitable bathrooms.** A visitable dwelling must be designed and constructed with at least one bathroom group or a half bath on the first floor that meets the following requirements:

1. Minimum door size: A minimum clear opening of 30 inches is required; (32" door)
2. Grab bar provision: Lateral two-inch by six-inch or larger nominal wood blocking must be installed flush with stud edges of bathroom walls; and
3. The centerline of the blocking must be 34 inches from and parallel to the interior floor level, except for the portion of the wall located directly behind the lavatory.

A.2. **R320.4 Visitable light switches, receptacles, and environmental controls.** The first floor of a visitable dwelling must meet the following requirements:

1. Light switches and environmental controls must be no higher than 48 inches above the interior floor level.
2. Outlets and receptacles must be a minimum of 15 inches above the interior floor level, except for floor outlets and receptacles.

A.3. **R320.5 Visitability bathroom route.** A bathroom group or half bath designated for Visitability under Section R320.3 must be accessible by a route with a minimum clear opening of 32 inches beginning at the visitable entrance designated under Section 320.6 and continuing through the living room, dining room, and kitchen, and be level with ramped or beveled changes at door thresholds.
Exception:
A visitable route is not required through an area located on a split-level or sunken floor, provided an alternative route is available.

A.4. **R320.6 Visitable dwelling entrance.** A dwelling must be accessible by at least one no-step entrance with a beveled threshold of one-half inch or less and a door with a clear width of at least 32 inches. The entrance may be located at the front, rear, or side, or in the garage or carport, of the dwelling.

Effective on July 1, 2015 R320.7 Exterior visitable route. A visitable entrance approved under Section R320.6 must have at least one visitable route with a cross slope of no greater than two percent (1:50) that originates from a garage, driveway, public street, or public sidewalk. A ramp included in an exterior visitable route must comply with the Residential Code.
Effective on July 1, 2015 R320.7.1 Waiver of exterior visitable route provision for certain properties. The requirements of Section R320.7 do not apply to:

1. Lots with 10% or greater slope prior to development; or
2. Properties for which compliance cannot be achieved without the use of switchbacks.

GENERAL DIMENSION NOTES:

ALL DIMENSIONS ARE TO THE FACE OF FRAMING UNLESS OTHERWISE NOTED IN PLAN OR ELEVATION.

ALL WINDOW AND EXTERIOR DOORS ARE DIMENSIONED TO EITHER THEIR ROUGH OPENING OR THEIR CENTERLINE LOCATION.

ALL INTERIOR DOORS ARE DIMENSIONED TO THE CENTERLINE OF THE DOOR.

TEMPERED DOORS AND WINDOWS ARE NOTED ON DOOR AND WINDOW SCHEDULE. THESE DRAWINGS ATTEMPT TO NOTE ALL NECCESSARY LOCATIONS BUT ARE SUBJECT TO CODE REVISIONS. THE G.C. AND WINDOW SUB-CONTRACTOR ARE RESPONSIBLE TO CONFIRM ALL REQUIRED LOCATIONS UNDER CURRENT IRC AND CITY OF AUSTIN BUILDING CODE.

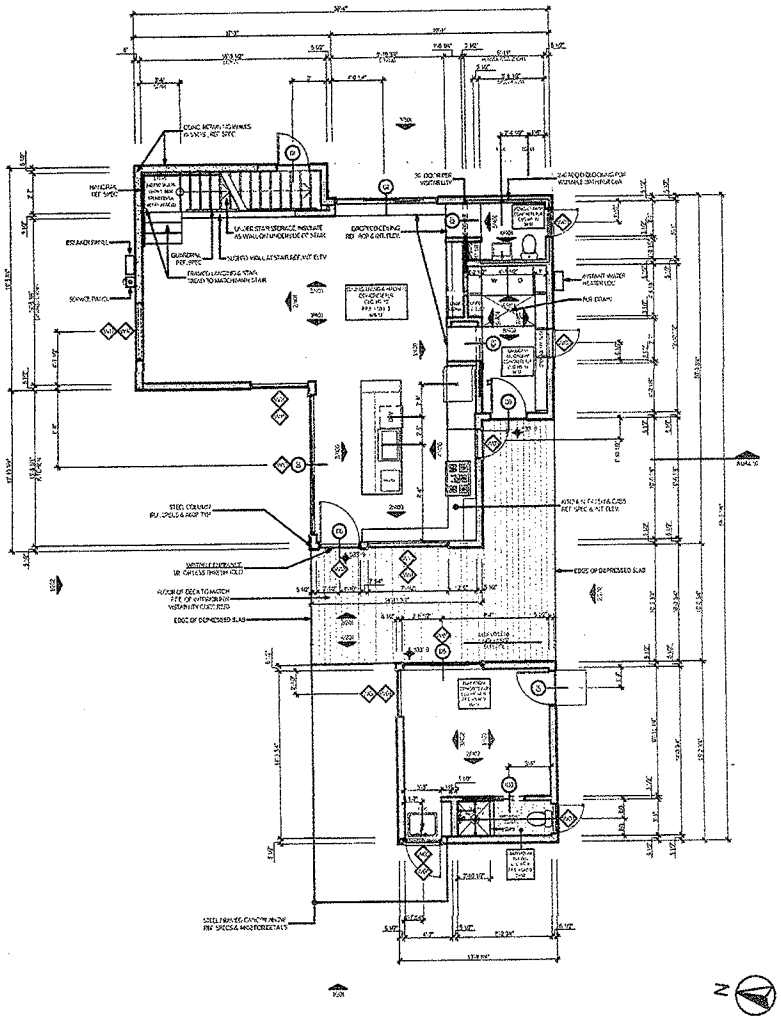

PLAN: GROUND FLOOR 1
SCALE: 3/32" = 1'-0"

ARBIB HUGHEY DESIGN
2235 E. 5TH ST. #104 AUSTIN, TX 78702

project info:

project name:
DAVIDSON RESIDENCE

physical location:
1803 CLIFFORD STREET
AUSTIN, TEXAS 78702

owners:
Amanda & Graham Davidson
1802 Sanchez Street
Austin, TX 78702
512.698.2967

contractor:
Amanda Davidson
Mills Group / FPT, LLC
1802 Sanchez Street
Austin, TX 78702
512.698.2967

engineer:
LEAPSTRUCTURES
3001 S. Lamar Blvd., Suite A-230
Austin, TX 78704-8863
512.299-3999

phase info:

set name:
CoA Building Permit Set

date submitted:
2014.08.04

revisions:

REGISTERED ARCHITECT EDWARD W. HUGHEY STATE OF TEXAS

UNLESS SIGNED AND SEALED BY THE ARCHITECT, THESE DRAWINGS MAY NOT BE USED FOR REGULATORY APPROVAL, PERMITTING, OR CONSTRUCTION

drawing info:

PLAN: GROUND FLOOR

BP.2

B2/19

GENERAL DIMENSION NOTES:

ALL DIMENSIONS ARE TO THE FACE OF FRAMING UNLESS OTHERWISE NOTED IN PLAN OR ELEVATION.

ALL WINDOW AND EXTERIOR DOORS ARE DIMENSIONED TO EITHER THEIR ROUGH OPENING OR THEIR CENTERLINE LOCATION.

ALL INTERIOR DOORS ARE DIMENSIONED TO THE CENTERLINE OF THE DOOR.

TEMPERED DOORS AND WINDOWS ARE NOTED ON DOOR AND WINDOW SCHEDULE. THESE DRAWINGS ATTEMPT TO NOTE ALL NECCESSARY LOCATIONS BUT ARE SUBJECT TO CODE REVISIONS. THE G.C. AND WINDOW SUB-CONTRACTOR ARE RESPONSIBLE TO CONFIRM ALL REQUIRED LOCATIONS UNDER CURRENT IRC AND CITY OF AUSTIN BUILDING CODE.

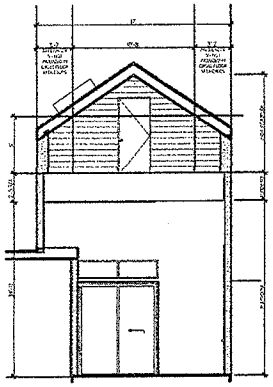

FAR EXEMPTION EXHIBIT 2
SCALE: 3/32" = 1'-0"

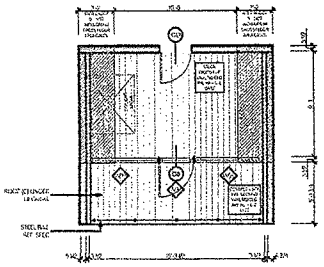

PLAN: SECOND FLOOR STUDY 2
SCALE: 3/32" = 1'-0"

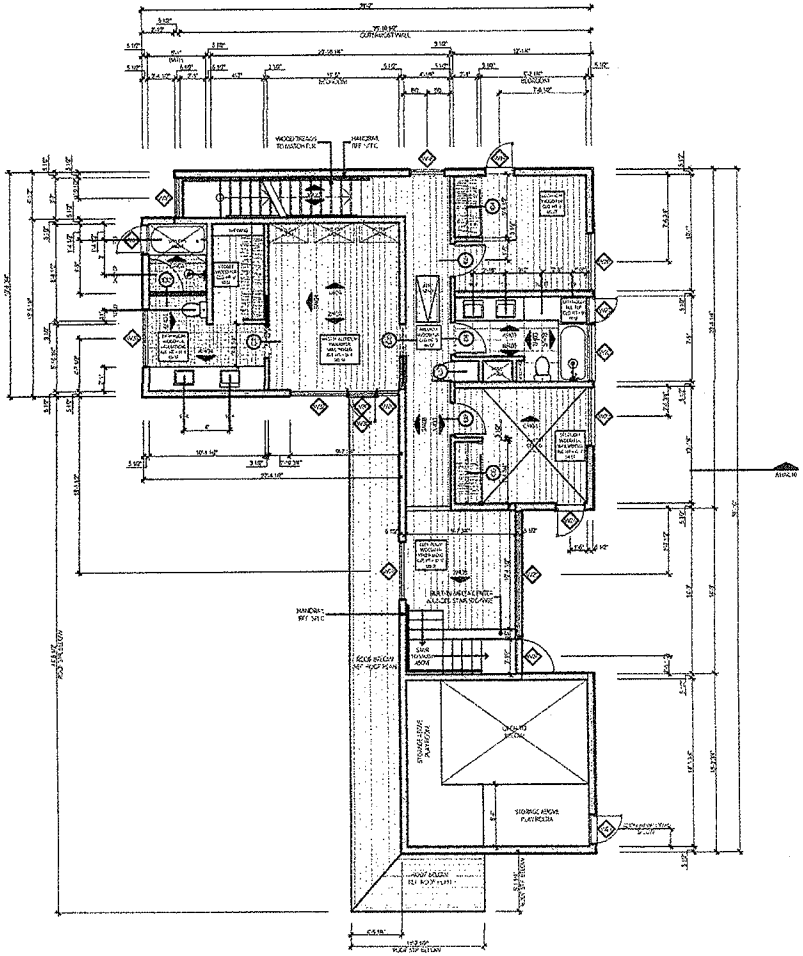

PLAN: SECOND FLOOR 1
SCALE: 3/32" = 1'-0"

ARBIB HUGHEY DESIGN
2235 E. 6TH ST., #104 AUSTIN, TX 78702

project info:

project name:
DAVIDSON RESIDENCE

physical location:
1803 CLIFFORD STREET
AUSTIN, TEXAS 78702

owner:
Amanda & Graham Davidson
1802 Sanchez Street
Austin, TX 78702
512.698.2997

contractor:
Amanda Davidson
Mds Group / RPT, LLC
1802 Sanchez Street
Austin, TX 78702
512.698.2997

engineer:
LEAPISTRUCTURES
3001 S. Lamar Blvd., Suite A-230
Austin, TX 78704-8863
512.298-3999

phase info:

set info:
CoA Building Permit Set

date submitted:
2014.08.04

REGISTERED ARCHITECT EDWARD W. HUGHEY 20024 STATE OF TEXAS

UNLESS SIGNED AND SEALED BY THE ARCHITECT, THESE DRAWINGS MAY NOT BE USED FOR REGULATORY APPROVAL, PERMITTING, OR CONSTRUCTION.

drawing info:

PLAN: SECOND FLOOR

BP.3

8/21

ARBIB HUGHEY DESIGN
2235 E. 6TH ST. #104 AUSTIN, TX 78702

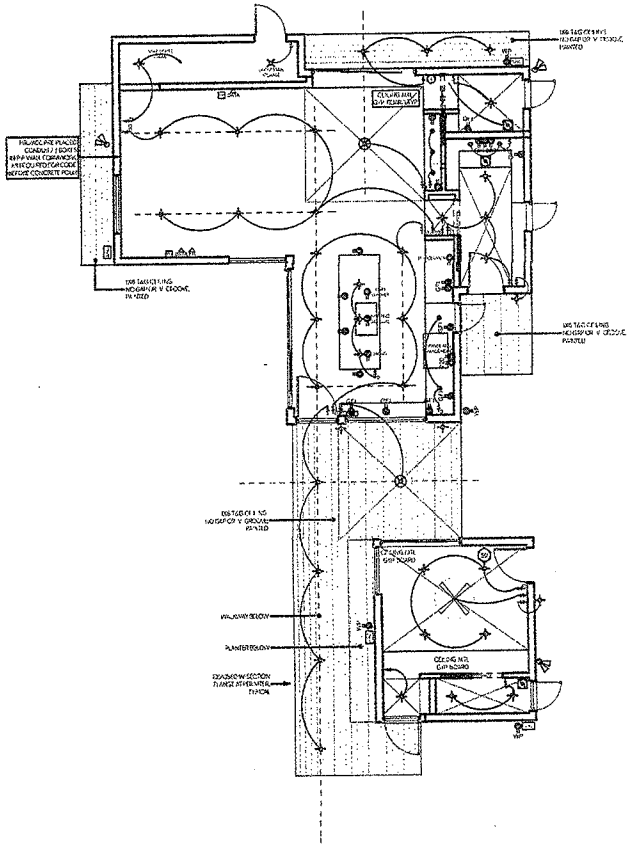

RCP: GROUND FLOOR 1
SCALE: 1/2" = 1'-0"

ELECTRICAL LEGEND			
CS	CEILING SPACE INTERCOM		CABLE RECEPTACLE
	WIRING	GFI	GROUND FAULT INTERRUPT RECEPTACLE
	SURFACE MOUNTED FIXTURE		
	RECESSED MOUNTED FIXTURE	GFI	GFI RECEPTACLE MOUNTED 4' ABOVE COUNTERTOP
	RECESSED WALL WASHER FIXTURE		
	PENDANT LIGHT	WP	WATER PROOF DUPLEX RECEPTACLE
	DIRECTIONAL LIGHT		
	SCONCE LIGHT	220	220 VOLT RECEPTACLE
	UP LIGHT		FLOOR RECEPTACLE
	LED LIGHTING W/ MODULE (AS PER CALENDER)		SWITCH
	RECESSED OUTER		3-WAY SWITCH
	DATA OUTLET		DIMMABLE SWITCH
	CABLE RECEPTACLE/ JUNCTION		3-WAY DIMMABLE SWITCH
	SMOKE DETECTOR (AS REQ'D BY CODE)		EXHAUST VENT
			THERMOSTAT LOCATION (VERIFY WITH HVAC SPEC)
	CEILING FAN		DELIVERY CONTROLS
			CEILING FLOOD LIGHT & MOTION DETECTOR

ELECTRICAL NOTES

1. ELECTRICAL RECEPTACLES SHOWN ARE ONLY SINGLE MOUNTED FOR DESIGN PURPOSES. ELECTRICIAN TO DETERMINE LOCATION AND TYPE OF ALL NECESSARY ADDITIONAL RECEPTACLES IN ORDER TO MEET APPLICABLE BUILDING CODES.
2. ELECTRICIAN TO PROVIDE GFI CIRCUIT WHERE REQUIRED BY APPLICABLE CODE.
3. ELECTRICIAN TO DETERMINE THE NECESSARY FOR MOUNTING OF SPECIAL USE DEVICES AND CONDITIONS (I.E. HOOD, REFRIGERATOR, LIGHT FIXTURE SWITCH, ETC.) AND TO PROVIDE PROPER INSTALLATION OF DEVICES WHERE REQUIRED.
4. ALL WIRE (INCLUDING SERVICE WIRE) TO BE COPPER
5. ALL SWITCHES ARE TO FACE OF FRAMING
6. ALL INTERIOR SWITCHES, RECEPTACLES AND COVER PLATES PER OWNER SPEC. UNLESS OTHERWISE NOTED.
7. ALL SURFACE AND RECESSED FIXTURES PER OWNER SPEC.
8. PROVIDE SMOKE DETECTORS AS NECESSARY TO FULFILL APPLICABLE CODES REQUIREMENTS.
9. HEAD AND WALL RECEPTACLES TO BE 12" & 16" ABOVE FF, TO COVER OF BOX OPENING
10. STANDARD WALL THERMOSTATS SET @ 48" ABOVE FINISH CENTER OF BOXES

project info:

project name:
DAVIDSON RESIDENCE

physical location:
1803 CLIFFORD STREET
AUSTIN, TEXAS 78702

owners:
Amanda & Graham Davidson
1802 Sanchez Street
Austin, TX 78702
512.699.2987

contractor:
Amanda Davidson
Mills Group / FPT, LLC
1802 Sanchez Street
Austin, TX 78702
512.698.2687

engineer
LEAPSTRUCTURES
3001 S. Lamar Blvd., Suite A-230
Austin, TX 78704-8863
512.208-3999

phase info:

set type:
CoA Building Permit Set

date submitted:
2014.08.04

revisions:

REGISTERED ARCHITECT EDWARD W. HUGHEY 16224 STATE OF TEXAS

UNLESS SIGNED AND SEALED BY THE ARCHITECT, THESE DRAWINGS MAY NOT BE USED FOR REGULATORY APPROVAL, PERMITTING, OR CONSTRUCTION

drawing info:

RCP: GROUND FLOOR

BP.4

B2/100

ARBIB HUGHEY DESIGN
2235 E. 6TH ST., #104 AUSTIN, TX 78702

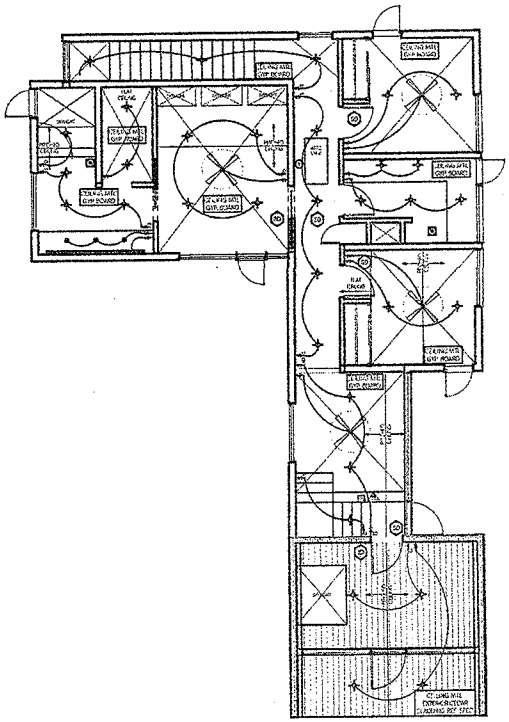

RCP: SECOND FLOOR 1
SCALE: 1/32" = 1'-0"

project info:

project name:
DAVIDSON RESIDENCE

physical location:
1803 CLIFFORD STREET
AUSTIN, TEXAS 78702

owners:
Amanda & Graham Davidson
1802 Sanchez Street
Austin, TX 78702
512.696.2987

contractor:
Amanda Davidson
Mile Group / FPT, LLC
1802 Sanchez Street
Austin, TX 78702
512.696.2987

engineer:
LEAPSTRUCTURES
3001 S. Lamar Blvd., Suite A-220
Austin, TX 78704-8883
512.298-3909

phase info:

set title:
CoA Building Permit Set

date submitted:
2014.06.04

addenda:

REGISTERED ARCHITECT EDWARD W. HUGHEY STATE OF TEXAS

UNLESS SIGNED AND SEALED BY THE ARCHITECT, THESE DRAWINGS MAY NOT BE USED FOR REGULATORY APPROVAL, PERMITTING OR CONSTRUCTION.

drawing info

RCP: SECOND FLOOR

BP.5

B/5

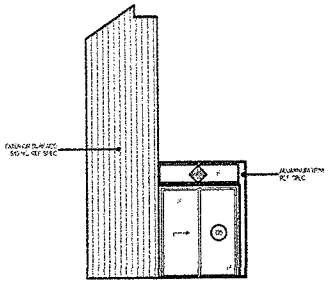

EXTERIOR ELEV: INT. EAST 4

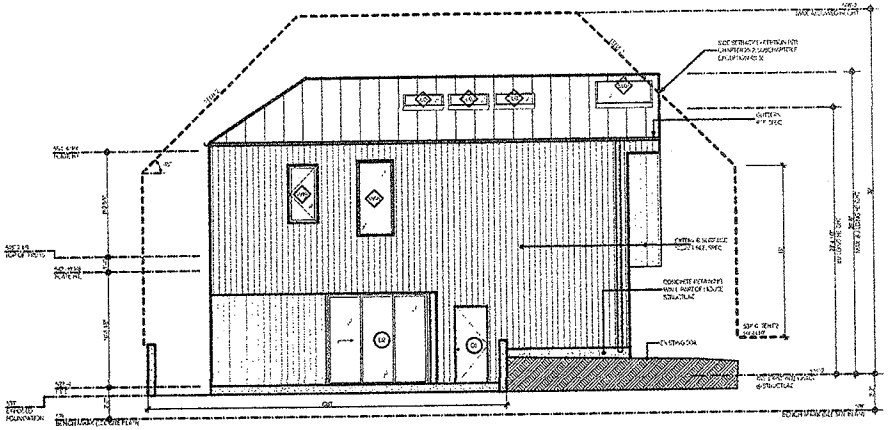

EXTERIOR ELEV: EAST 3

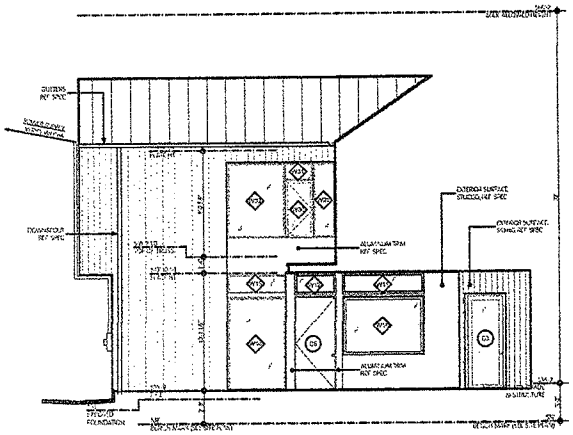

EXTERIOR ELEV: INT. WEST 2

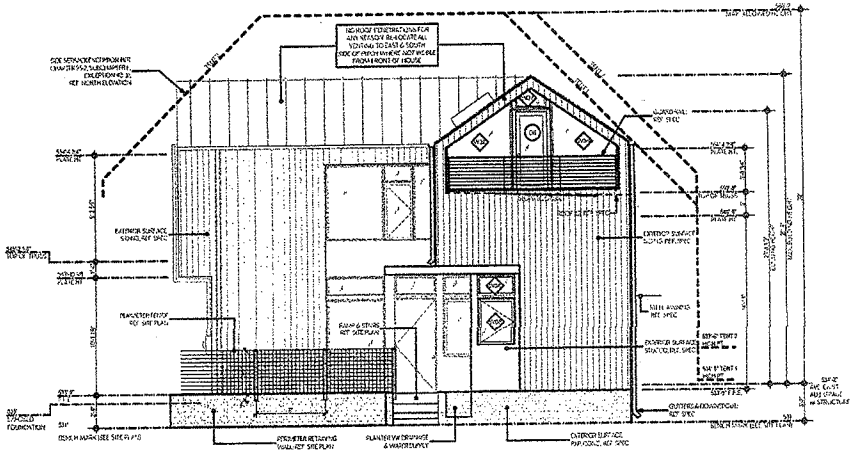

EXTERIOR ELEV: WEST 1

ARBIB HUGHEY DESIGN
2235 E. 6TH ST. #104 AUSTIN, TX 78702

project info:

project name:
DAVIDSON RESIDENCE

physical location:
1803 CLIFFORD STREET
AUSTIN, TEXAS 78702

owners:
Amanda & Graham Davidson
1802 Sanchez Street
Austin, TX 78702
512.693.2987

contractor:
Amanda Davidson
Mills Group / FPT, LLC
1802 Sanchez Street
Austin, TX 78702
512.693.2987

engineer:
LEAPSTRUCTURES
3001 S. Lamar Blvd., Suite A-230
Austin, TX 78704-8853
512.298-3906

phase info:

set title:
CoA Building Permit Set

date submitted:
2014.08.04

revisions:

REGISTERED ARCHITECT EDWARD W. HUGHEY STATE OF TEXAS

UNLESS SIGNED AND SEALED BY THE ARCHITECT, THESE DRAWINGS MAY NOT BE USED FOR REGULATORY APPROVAL, PERMITTING, OR CONSTRUCTION

drawing info:

EXTERIOR ELEVATIONS

BP.6

2/8/20

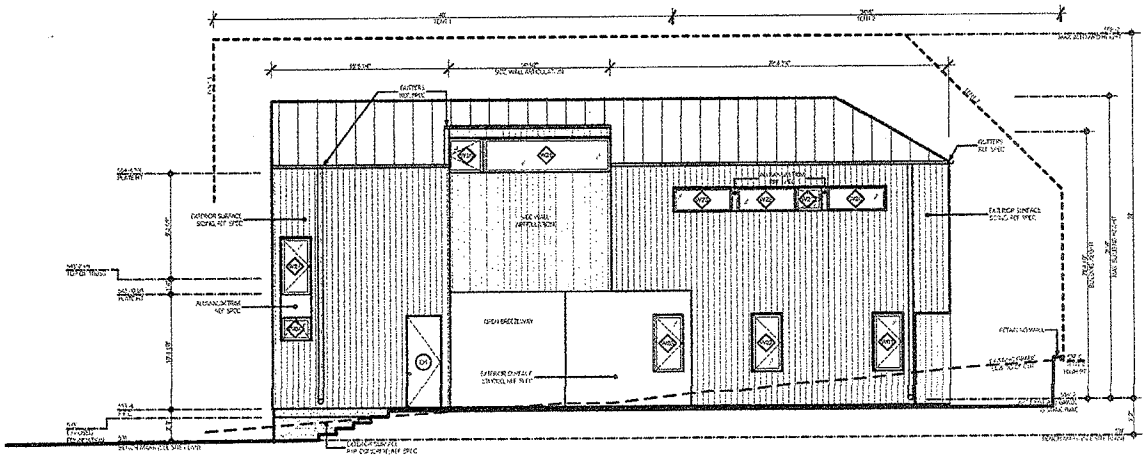

EXTERIOR ELEV: SOUTH 2

SCALE: 3/32" = 1'-0"

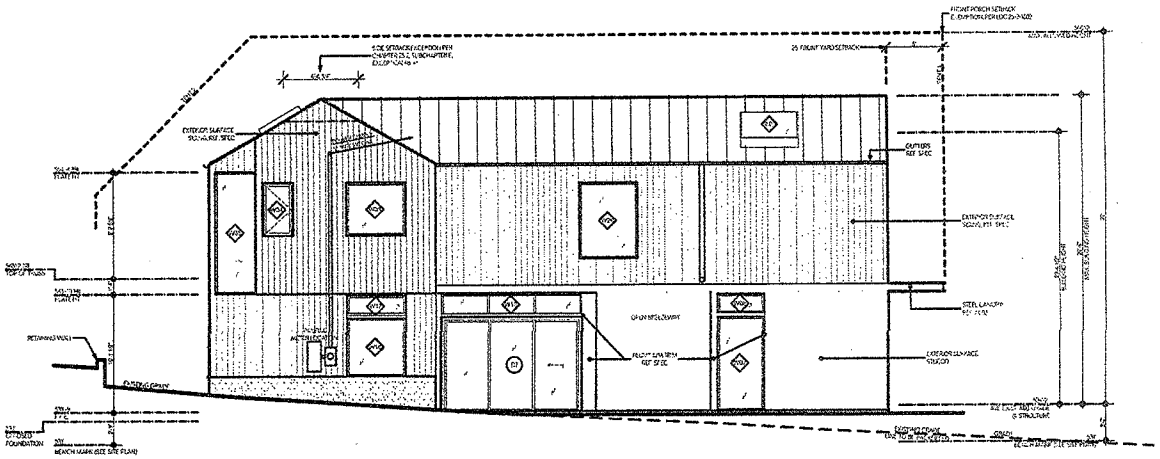

EXTERIOR ELEV: NORTH 1

SCALE: 3/32" = 1'-0"

ARBIB HUGHEY DESIGN
2235 E. 6TH ST. #104 AUSTIN, TX 78702

project info:

project name
DAVIDSON RESIDENCE

physical location
1802 CLIFFORD STREET
AUSTIN, TEXAS 78702

owners:
Amanda & Graham Davidson
1802 Sanchez Street
Austin, TX 78702
512.698.2987

contractor:
Amanda Davidson
Atlas Group / PPT, LLC
1802 Sanchez Street
Austin, TX 78702
512.698.2987

engineer:
LEAPISTRUCTURES
3001 S. Lamar Blvd., Suite A-330
Austin, TX 78704-8853
512.299-3999

phase info:

set info:
CoA Building Permit Set

date submitted:
2014.06.04

REVISIONS:

REGISTERED ARCHITECT EDWARD W. HUGHEY COUNTY OF TRAVIS STATE OF TEXAS

UNLESS SIGNED AND SEALED BY THE ARCHITECT, THESE DRAWINGS MAY NOT BE USED FOR REGULATORY APPROVAL, PERMITTING, OR CONSTRUCTION.

drawing info:

EXTERIOR ELEVATIONS

BP.7

8/2

DOOR SCHEDULE

ID	TYPE	SIZE (WxH)	MATERIAL	EXT. FINISH	INT. FINISH	MULLED / STA.	TEMPERED	NOTES
D1	EXTERIOR HINGED DOOR	2'-8"x8'-0"	WOOD: SOLID CORE FLAT PANEL	PAINT GRADE	PAINT GRADE	-	-	-
D2	GLAZED 3-PANEL SLIDING DOOR W/ SCREEN	9'x8'	ALUMINUM		ANODIZED BRONZE		YES	-
D3	SINGLE LITE EXTERIOR HINGED DOOR	3'x8'	ALUMINUM	ANODIZED BRONZE	ANODIZED BRONZE	-	YES	-
D4	EXTERIOR HINGED DOOR	2'-10"x8'	WOOD: SOLID CORE FLAT PANEL	PAINT GRADE	PAINT GRADE	-	-	-
D5	GLAZED 2-PANEL SLIDING DOOR W/ SCREEN	7'x8'	ALUMINUM	ANODIZED BRONZE	ANODIZED BRONZE	-	YES	-
D6	EXTERIOR HINGED DOOR	3'-6"x8'	WOOD: SOLID CORE FLAT PANEL	PAINT GRADE	PAINT GRADE	-	-	-
D7	GLAZED 3-PANEL SLIDING DOOR W/ SCREEN	12'x8'	ALUMINUM	ANODIZED BRONZE	ANODIZED BRONZE	-	YES	-
D8	SINGLE LITE EXTERIOR HINGED DOOR	3'x8'	ALUMINUM	ANODIZED BRONZE	ANODIZED BRONZE	-	YES	-
ID1	POCKET DOOR	3'x8'	WOOD: SOLID CORE FLAT PANEL	PAINT GRADE	PAINT GRADE	-	-	-
ID2	POCKET DOOR	3'x8'	WOOD: SOLID CORE FLAT PANEL	PAINT GRADE	PAINT GRADE	-	-	-
ID3	POCKET DOOR	2'-5"x8'	WOOD: SOLID CORE FLAT PANEL	PAINT GRADE	PAINT GRADE	-	-	-
ID4	SLIDING DOOR	5'x8'-5"	WOOD: FLAT PANEL	PAINT GRADE	PAINT GRADE	-	-	CLOSET DOOR
ID5	HINGED DOOR	2'-6"x8'	WOOD: SOLID CORE FLAT PANEL	PAINT GRADE	PAINT GRADE	-	-	-
ID6	HINGED DOOR	2'-8"x8'	WOOD: SOLID CORE FLAT PANEL	PAINT GRADE	PAINT GRADE	-	-	-
ID7	HINGED DOOR	1'-8"x8'	WOOD: SOLID CORE FLAT PANEL	PAINT GRADE	PAINT GRADE	-	-	-
ID8	HINGED DOOR	2'-8"x8'	WOOD: SOLID CORE FLAT PANEL	PAINT GRADE	PAINT GRADE	-	-	-
ID9	SLIDING DOOR	5'x8'-8"	WOOD: FLAT PANEL	PAINT GRADE	PAINT GRADE	-	-	CLOSET DOOR
ID10	POCKET DOOR	2'-8"x8'	WOOD: SOLID CORE FLAT PANEL	PAINT GRADE	PAINT GRADE	-	-	-
ID11	POCKET DOOR	2'-8"x8'	WOOD: SOLID CORE FLAT PANEL	PAINT GRADE	PAINT GRADE	-	-	-
ID12	GLASS SHOWER DOOR	3'x8'	GLASS	CLEAR	CLEAR	-	YES	INTEGRATE WITH GLASS PANEL ON RIGHT
ID13	HINGED DOOR	2'-8"x6'-8"	WOOD: SOLID CORE FLAT PANEL	PAINT GRADE	PAINT GRADE	-	-	-

WINDOW SCHEDULE

ID	TYPE	SIZE (W x H)	MATERIAL	EXT. FINISH	INT. FINISH	TEMPERED	MULLED / STACKED	NOTES
SL01	SKYLIGHT	---	ALUMINUM	ANODIZED BRONZE	ANODIZED BRONZE	PER CODE	-	SIZE: 5'x8' OR MULTIPLES - VELUX CURB MOUNT LOW-E CLEAR GLASS
SL02	SKYLIGHT	---	ALUMINUM	ANODIZED BRONZE	ANODIZED BRONZE	PER CODE	-	SIZE: 3'-6"x2' OR MULTIPLES - VELUX CURB MOUNT LOW-E CLEAR GLASS
SL03	SKYLIGHT	---	ALUMINUM	ANODIZED BRONZE	ANODIZED BRONZE	PER CODE	-	SIZE: 3'-6"x2' OR MULTIPLES - VELUX CURB MOUNT LOW-E CLEAR GLASS
SL04	SKYLIGHT	---	ALUMINUM	ANODIZED BRONZE	ANODIZED BRONZE	PER CODE	-	SIZE: 3'-6"x2' OR MULTIPLES - VELUX CURB MOUNT LOW-E CLEAR GLASS
SL05	SKYLIGHT	---	ALUMINUM	ANODIZED BRONZE	ANODIZED BRONZE	PER CODE	-	SIZE: 5'x2' OR MULTIPLES - VELUX CURB MOUNT LOW-E CLEAR GLASS
W01	CASEMENT	2'-6"x5'	ALUMINUM	ANODIZED BRONZE	ANODIZED BRONZE	NO	-	-
W02	CASEMENT	2'-6"x5'	ALUMINUM	ANODIZED BRONZE	ANODIZED BRONZE	NO	-	-
W03	CASEMENT	2'-6"x5'	ALUMINUM	ANODIZED BRONZE	ANODIZED BRONZE	NO	-	-
W04	AWNING	2'-6"x2'	ALUMINUM	ANODIZED BRONZE	ANODIZED BRONZE	NO	-	-
W05	CASEMENT	3'-2"x4'	ALUMINUM	ANODIZED BRONZE	ANODIZED BRONZE	NO	-	-
W06	FIXED	2'-2"x1'-7"	ALUMINUM	ANODIZED BRONZE	ANODIZED BRONZE	NO	-	-
W07	FIXED	4'x8'	ALUMINUM	ANODIZED BRONZE	ANODIZED BRONZE	YES	-	-
W08	FIXED	4'x1'-7"	ALUMINUM	ANODIZED BRONZE	ANODIZED BRONZE	NO	-	-
W09	FIXED	7'x1'-7"	ALUMINUM	ANODIZED BRONZE	ANODIZED BRONZE	NO	-	-
W10	FIXED	7'x5'	ALUMINUM	ANODIZED BRONZE	ANODIZED BRONZE	YES	-	-
W11	FIXED	7'x1'-7"	ALUMINUM	ANODIZED BRONZE	ANODIZED BRONZE	NO	-	-
W12	FIXED	3'-6"x1'-7"	ALUMINUM	ANODIZED BRONZE	ANODIZED BRONZE	NO	-	-
W13	FIXED	12'x1'-7"	ALUMINUM	ANODIZED BRONZE	ANODIZED BRONZE	NO	-	2 VERT T-BARS
W14	FIXED	5'x8'	ALUMINUM	ANODIZED BRONZE	ANODIZED BRONZE	YES	-	-
W15	FIXED	5'x1'-7"	ALUMINUM	ANODIZED BRONZE	ANODIZED BRONZE	NO	-	-
W16	FIXED	5'x8'	ALUMINUM	ANODIZED BRONZE	ANODIZED BRONZE	NO	-	-
W17	FIXED	5'x1'-7"	ALUMINUM	ANODIZED BRONZE	ANODIZED BRONZE	NO	-	-
W18	FIXED	3'x6'-6"	ALUMINUM	ANODIZED BRONZE	ANODIZED BRONZE	NO	-	-
W19	CASEMENT	2'-6"x5'	ALUMINUM	ANODIZED BRONZE	ANODIZED BRONZE	NO	-	-
W20	FIXED	5'x2'	ALUMINUM	ANODIZED BRONZE	ANODIZED BRONZE	NO	-	-
W21	CASEMENT	2'-3 1/2"x2'	ALUMINUM	ANODIZED BRONZE	ANODIZED BRONZE	YES	MULLED	MULL W/ W22
W22	FIXED	5'x2'	ALUMINUM	ANODIZED BRONZE	ANODIZED BRONZE	YES	MULLED	MULL W/ W21
W23	FIXED	5'x2'	ALUMINUM	ANODIZED BRONZE	ANODIZED BRONZE	NO	-	-
W24	CASEMENT	2'-8"x5'	ALUMINUM	ANODIZED BRONZE	ANODIZED BRONZE	NO	-	-
W25	FIXED	11'x3'	ALUMINUM	ANODIZED BRONZE	ANODIZED BRONZE	NO	MULLED	MULL W/ W26
W26	CASEMENT	3'x3'	ALUMINUM	ANODIZED BRONZE	ANODIZED BRONZE	YES	MULLED	MULL W/ W25
W27	CASEMENT	2'-8"x5'	ALUMINUM	ANODIZED BRONZE	ANODIZED BRONZE	YES	-	-
W28	FIXED	5'x8'-8"	ALUMINUM	ANODIZED BRONZE	ANODIZED BRONZE	NO	-	-
W29	FIXED	1'-1 1/2"x5'-5"	ALUMINUM	ANODIZED BRONZE	ANODIZED BRONZE	NO	MULLED	MULL W/ W30 & W31
W30	CASEMENT	2'-6"x5'	ALUMINUM	ANODIZED BRONZE	ANODIZED BRONZE	NO	MULLED & STACKED	MULL W/ W29 & W32 STACK W/ W31
W31	FIXED	2'-6"x1'-6"	ALUMINUM	ANODIZED BRONZE	ANODIZED BRONZE	NO	MULLED & STACKED	MULL W/ W29 & W32, STACK W/ W30
W32	FIXED	5'x6'-6"	ALUMINUM	ANODIZED BRONZE	ANODIZED BRONZE	NO	MULLED	MULL W/ W30 & W31
W33	FIXED	5'x4'-6"	ALUMINUM	ANODIZED BRONZE	ANODIZED BRONZE	YES	-	ADJ. TO DOOR
W34	CASEMENT	2'-6"x4'-6"	ALUMINUM	ANODIZED BRONZE	ANODIZED BRONZE	YES	-	-
W35	FIXED	3'-6"x10'-6 1/2"	ALUMINUM	ANODIZED BRONZE	ANODIZED BRONZE	NO	-	-
W36	FIXED	5'-10"x8'	ALUMINUM	ANODIZED BRONZE	ANODIZED BRONZE	YES	-	TRAPAZOID SHAPED 5'-10" x 3'-6" & 7'-6"
W37	FIXED	2'-8"x2'	ALUMINUM	ANODIZED BRONZE	ANODIZED BRONZE	NO	-	CUSTOM SHAPE SEE ELEV. XXXX
W38	FIXED	5'-10"x8'	ALUMINUM	ANODIZED BRONZE	ANODIZED BRONZE	YES	-	TRAPAZOID SHAPED 5'-10" x 3'-6" & 7'-6"

ARBIB HUGHEY DESIGN
2235 E. 6TH ST. #104 AUSTIN, TX 78702

project info:

project name:
DAVIDSON RESIDENCE

physical location:
1803 CLIFFORD STREET
AUSTIN, TEXAS 78702

owners:
Amanda & Graham Davidson
1802 Sanchez Street
Austin, TX 78702
512.698.2967

contractor:
Amanda Davidson
Mile Group / FPT, LLC
1802 Sanchez Street
Austin, TX 78702
512.698.2967

engineer:
LEAPSTRUCTURES
3001 S. Lamar Blvd., Suite A-230
Austin, TX 78704-8863
512.283-3899

phase info:

set title:
CoA Building Permit Set

date submitted:
2014.08.04

comments:

REGISTERED ARCHITECT EDWARD W. HUGHEY STATE OF TEXAS

UNLESS SIGNED AND SEALED BY THE ARCHITECT, THESE DRAWINGS MAY NOT BE USED FOR REGULATORY APPROVAL, PERMITTING, OR CONSTRUCTION

drawing info:

DOOR & WINDOW SCHEDULE

BP.8

2/2 2/2

COORDINATION

1. Only large openings in structural framing members are shown on the structural drawings. However, all sleeves, embeds, inserts, openings and frames that are necessary for the work shall be provided. The Contractor shall coordinate with all trades sizes, locations and placement. All openings and embedded items which have an effect on the structure shall be submitted to the Engineer for review.

2. Refer to Architectural, Mechanical, Electrical and Plumbing drawings for floor elevations, location of depressed or elevated floor areas, slopes and drains.

3. Contractor shall coordinate the requirements for building equipment supported on or from the structure. Submittals identify all equipment including size, dimensions, clearances, accessibility, weights and reactions. Any deviations from specified equipment shall be noted on the submittals.

4. Shop drawings shall be prepared for all structural items and submitted for review by the Engineer. Contract Drawings shall not be reproduced and used as shop drawings. All items deviating from the Contract Drawings or from previously submitted shop drawings shall be noted.

5. The details designated as "Typical Details" apply generally to the Drawings in all areas where conditions are similar to those described in the details.

6. The design and provision of all temporary supports required for the execution of the contract such as guys, braces, shores, reshores, falsework, supports and anchors are not included in these drawings and shall be the responsibility of the Contractor. Temporary supports shall not result in the overstress or damage to the structure.

SUBSTITUTIONS

1. All requests for substitutions of materials or details shown in the contract documents shall be submitted for approval during the bidding period. Once bids are accepted, proposed substitutions will be considered only when they are officially submitted with an identified savings to be deducted from the contract.

CODES

1. IRC 2012 International Residential Code with Amendments

2. Structural Concrete: Building Code Requirements for Reinforced Concrete, American Concrete Institute, ACI 318-08.

3. Structural Steel: Manual of Steel Construction, Load and Resistance Factor Design, American Institute of Steel Construction, Third Edition.

4. Wood Framing: National Design Specification For Wood Construction with Supplement, American Forest and Paper Association, ANSI / AF&PA NDS-2005.

5. Structural Plywood: Plywood Design Specification, American Plywood Association, Latest Edition.

6. Prefabricated Metal Plate Connected Wood Trusses: Design Standard for Metal Plate Connected Wood Truss Construction, ANSI/TPI 1-95.

DESIGN LOADS

1. Live Loads

a.	Roof	20 psf
b.	Residential	40 psf
c.	Awnings or canopies	12 psf

2. Dead Loads include the self weight of the structural elements and the following superimposed loads:

a.	Ceiling and Mechanical at roof	10 psf
b.	Ceiling and Mechanical at floor	5 psf
c.	Roofing and rigid insulation	15 psf

3. Wind Loads

a. Wind Lateral Load on Structural Frame is based on the following:

i)	Basic Wind Speed (3-sec. gust)	115 mph
ii)	Risk Category	II
iii)	Wind Exposure	B
iv)	Internal Pressure Coefficient	±0.18
v)	Component & Cladding Design Pressures:	

4. Roof Snow Loads

a.	Ground Snow Load	5 psf

5. Earthquake Loads

a. Seismic Lateral Load on Structural Frame is based on the following:

i) Seismic Importance Factor 1.0
Seismic Use Group I

ii) Mapped Spectral Response Accelerations
S/S 0.10
S/1 0.04

iii) Site Class D

iv) Spectral Response Coefficients
S/DS 0.1066
S/D1 0.064

v) Seismic Design Category A

vi) Basic Seismic-Force-Resisting System: Concrete Shear Walls

vii) Design Base Shear 0.05 W kips

viii) Seismic Response Coefficient
C/S 0.02

ix) Response Modification Factor
R 5

x) Analysis Procedure ELF

8. Loading for mechanical rooms and kitchens are based on the weights of equipment and concrete pads as indicated on the contract documents. Any revisions in equipment type, size, or quantity shall be reported to the Architect immediately for verification of the structural design.

9. Floor and roof live loads have been reduced in accordance with the building code.

BUILDING MOVEMENTS

1. The building movements specified herein are anticipated to occur and shall be taken into account by the Contractor in the design, detailing, and installation of the building elements.

2. Spandrel beam deflections: Provisions shall be made in the building cladding for relative floor to floor vertical deflections of 3/8".

3. Interior floor/roof deflections: Provisions shall be made in interior partitions and other elements supported by or attached to the floors or roofs for relative floor to floor vertical deflections of L/360.

4. Lateral building drift: Provisions shall be made in building cladding and other architectural finishes for relative floor to floor lateral deflections of story height/400.

SUBMITTALS

1. Shop drawings shall be prepared for all structural items and submitted for review by the Engineer. Contract Drawings shall not be reproduced and used as shop drawings. All items deviating from the Contract Drawings or from previously submitted shop drawings shall be clouded.

2. The contractor shall review shop drawings for compliance with the contract documents and shall certify that he has done so by a stamp noting that the drawings have been "Approved" and which bears the signature (or initials) of an authorized representative of the contractor and the date. Submittals which do not reflect the contractor's approval, signature and date will be returned without review.

3. The contractor shall be responsible for delays caused by rejection of inadequate shop drawings.

4. Where review and return of shop drawings is required or requested, the engineer will review each submittal and, where possible, return within 2 weeks of receipt.

5. Corrections or comments on shop drawings or manufacturer's data sheets do not relieve the contractor from compliance with requirements of the plans and specifications. The engineer's review is for general conformance with the requirements of the contract documents. The contractor is responsible for confirming and correcting all quantities and dimensions, selecting fabrication processes and techniques of construction, and coordinating his work with that of all other contractors.

6. Refer to individual sections for specific submittal requirements.

TESTING LABORATORY SERVICES

1. Work specified herein shall be performed by a qualified independent Testing Laboratory, selected and paid by the Owner.

2. Pier drilling operation: Make continuous inspections to determine that the proper bearing stratum is obtained and utilized for bearing and that the shafts are clean and dry before pouring concrete.

3. Filling and Backfilling operation:

a. Analyze backfill samples delivered by the contractor to determine compliance with gradation and quality requirements of the geotechnical report.
b. Make in place compaction tests for moisturecontent, moisture density relationship, and density of materials in place. Perform one test for each 5000 square feet of area per lift.

5. Footing excavation: Inspect the excavations to determine that the proper bearing stratum is obtained and utilized for bearing and that excavations are properly clean and dry before concrete is placed.

6. Concrete inspection and testing:

a. Secure composite samples of concrete at the jobsite in accordance with ASTM C172.
b. Mold and cure three specimens from each sample in accordance with ASTM C31. Test specimens in accordance with ASTM C39. Two specimens shall be tested at 28 days for acceptance and one shall be tested at seven days for information.
c. Perform one strength test (three cylinders) for each 100 cubic yards of fraction thereof, of each mix design placed in one day.
d. Make one slump test for each set of cylinders following the procedural requirements of ASTM C143 and C172.
e. Determine total air content of air entrained concrete in accordance with ASTM C231. Perform one test for each strength test.

7. Concrete Reinforcement: Inspect all concrete reinforcing steel and embedded metal assemblies prior to placement of concrete for compliance with Contract Documents and shop drawings. All instances of non-compliance shall be immediately brought to the attention of the contractor for correction, and if uncorrected, reported to the engineer.

9. Expansion Anchors: Provide continuous inspection of expansion bolt installation to ensure that holes are of the specified size, and that bolts are properly installed including application of minimum installation torques.

10. Structural steel: Field inspection of proper erection of all members, visual examination of all field welding, visual inspection of all bolts, inspection of all shop fabricated members upon arrival at the jobsite for conformance with accepted fabrication and erection drawings, verification of welder's certificates.

BUILDING PAD PREPARATION

1. Structural fill material shall have a plasticity index between 5 and 20, and a liquid limit less than 40. Gradation of material shall be as follows:

Retained on 21/2" screen	0%
Retained on 11/2" screen	0% - 25%
Retained on 3/4" screen	25% - 55%
Retained on 1/4" screen	45% - 75%
Retained on No. 40 mesh sieve	60% - 90%

2. Prior to placing fill material, remove all organic and other deleterious material from the existing subgrade for a distance of 3'-0" beyond building line. All exposed surfaces shall then be scarified to a depth of 3 feet, watered as required and recompacted to a minimum of 95 percent of the maximum dry density as defined by ASTM D 698 (Standard Proctor Test) at a moisture content within 2 percent of the optimum moisture content.

3. Structural fill shall be placed in 8 inch loose lifts, watered as required and compacted to a minimum of 95 percent of the maximum dry density as defined in ASTM D 698 at a moisture content within 2 percent of the optimum moisture content.

4. Compaction and moisture content of subgrade and each lift of structural fill shall be inspected and approved by a qualified engineering technician, supervised by a Geotechnical Engineer.

5. Provide a 1 foot thick clay cap at perimeter of building to protect pad from moisture intrusion. Cap can be formed of on-site clays, placed in 6" lifts, and compacted to 90 percent of the maximum dry density as defined by ASTM D 698 (Standard Proctor Test). Cap shall slope away from building.

6. Slab on grade shall be placed over a minimum of 36" of engineered structural fill.

7. Provide a 10 mil polyhalin vapor barrier. Place vapor barrier in accordance with manufacturer's recommendation on top of structural fill.

8. Building pad preparation information is based on a geotechnical report provided by Capital Geotechnical Services PLLC., dated May 22, 2014.

CONTROLLED BACKFILL

1. Backfill material shall have a plasticity index between 5 and 20, with a liquid limit less than 40.

2. Fill shall be placed in lifts not to exceed 8 inches.

3. Fill shall be compacted at the optimum moisture content (-1% to +3%) to between 90 and 95 percent of the maximum dry density per ASTM D698.

4. Compaction and moisture content of controlled backfill shall be verified by an independent testing laboratory.

5. The top 1 ft of material below the ground surface shall consist of relatively impervious material, with a liquid limit between 40 and 50 percent and a plasticity index between 20 and 30. This material shall be placed in 6" lifts and compacted at optimum moisture content, to 95 percent of the maximum density per ASTM D698.

6. Backfill material shall not be placed against foundation walls until all supporting slabs, beams, struts, etc., have attained their 28 day design strength unless proper bracing is installed.

7. Where backfill is required on both sides of a structure or building element, backfill shall be placed simultaneously along both sides so that the backfill height on one side does not exceed the height on the opposite side by more than 4'-0".

8. Design of basement and retaining walls is based on equivalent hydrostatic pressure of 65 pcf, assuming free draining backfill and use of perforated drain pipe in accordance with the geotechnical report prepared b Capital Geotechnical Services PLLC., dated May 22, 2014.

ARBIB HUGHEY DES
2235 EAST 6th ST. #104 AUSTIN, TX 78

Leap!Structures
3001 S. Lamar Blvd. Suite A-230
Austin, Texas 78704
512.298.3998

project i

project name:
DAVIDSON RESIDENCE

physical location:
1802 CLIFFORD STREET
AUSTIN, TEXAS 78702

owner:
Amanda & Graham Davidson
1802 Sanchez Street
Austin, TX 78702
512.698.2987

contractor:
TBD

engineer:
LEAPISTRUCTURES
3001 S Lamar Blvd. Suite A-230
Austin, TX 78704
512.298.3998

phase info:

set:
PERMIT SET

date: 2014.08.01

revisions

copyr

drawin

GENERAL NOTES

S00

2/3
2

CONCRETE MATERIALS

. Cast in place concrete shall meet the following requirements:

Class	28 Day Concrete Strength	Type	Size	Slump	Use
A	3000psi NW	C33	1"	4"-6"	All

. Fly ash shall not be used in architecturally exposed concrete.

. Provide 5 percent plus or minus 1 1/2 percent of entrained air in concrete permanently exposed to the weather and elsewhere at the contractors option. Do not use entrained air n drilled piers.

. Horizontal construction joints in concrete pours shall be permitted only where ndicated on the drawings. All vertical construction joints shall be made in the center of ans in accordance with the typical details. Contractor shall submit proposed locations or construction joints not shown on drawings for review by the Architect and Structural ngineer. Additional construction joints may require additional reinforcing as specified by he Engineer which shall be provided by the contractor at no additional cost to the owner.

. Embedded conduits, pipes, and sleeves shall meet the requirements of ACI 318-02, ection 6.3, including the following:

. Conduits and pipes embedded within a slab, wall, or beam (other than those passing hrough) shall not be larger in outside dimension than 1/3 the overall thickness of the lab, wall or beam in which they are embedded.

. Conduits, pipes and sleeves shall not be spaced closer than three diameters or widths n center.

CONCRETE FOOTINGS

. Concrete grade beams are placed on stiff brown silty sand at level 1, or stiff reddish an and gray sandy clay at basement.

. Footings not specifically located on the plan shall be located on centerline of pilaster r column above. Where no pilaster or column occurs, locate on centerline of wall or beam.

. Provide dowels from footings into concrete above using same bar size and number as *hown for pilaster or column above. Where no pilaster or column occurs, use 4-#7* owels. Extend dowels 30 bar diameters into pier and wall, beam, pilaster or column n.o.

. Elevation of top of plinths/footings, unless noted otherwise on drawings, is at the ottom of the deepest intersecting beam or wall supported by the footing.

. Footing excavations shall be to neat lines and shall be free of loose or wet materials.

. Footing reinforcing and concrete shall be placed immediately after excavations are ompleted; in no case shall a footing be excavated that cannot be placed by the end of the orkday.

. See plans and schedules for footing sizes, reinforcing and depths.

. Reinforcing steel shop drawings shall include placing drawings for templates to set owels in footings.

CONCRETE REINFORCING

. Reinforcing steel shall be deformed new billet steel bars in accordance with ASTM A615 rade 60.

. Detailing of reinforcing steel shall conform to the American Concrete Institute Detailing Manual.

. All hooks and bends in reinforcing bars shall conform to ACI detailing standards unless shown otherwise.

. Provide reinforcing bars in accordance with the bar bending diagram if bar types are pecified. In unscheduled beams, slabs, columns and walls detail reinforcing as follows:

- Lap top reinforcing bars at mid span.
- Lap bottom reinforcing bars at the supports.
- Lap vertical bars in columns and walls only at floor lines, unless noted otherwise.
- Refer to lap splice schedule for splice length requirement.
- Reinforcement labeled as continuous shall be lap spliced 38 bar diameters as a minimum, unless otherwise noted.
- Provide standard hooks in top bars at cantilever and discontinuous ends of beams, walls and slabs.
- Provide corner bars for all horizontal bars at the inside and outside faces of intersecting beams or walls. Corner bars are not required if top, bottom, or horizontal bars are hooked.

. Welding of reinforcing steel will not be permitted.

. Heat shall not be used in the fabrication or installation of reinforcement.

. Reinforcing steel clear cover shall be as follows:

- Grade beams - 11/2" top, 3" bottom, 2" side (formed), 3" side (placed against earth)
- Drilled piers - 3" bottom, 3" sides
- Walls - 3/4"
- Columns - 1 1/2"
- Slabs above grade - 3/4"
- Beams above grade - 11/2"
- Concrete joists - 1"

ADHESIVE ANCHORS

1. Adhesive anchors shall only be used where specified on the drawings. The contractor shall obtain approval from the engineer of record prior to using the anchors for missing or misplaced cast-in-place anchors.

2. Unless otherwise noted, size and depth of the adhesive anchors specified in the drawings are based on HAS rods epoxy doweled with HY 150 Max or RE 500, Hilti Fastening Systems.

3. Substitution of expansion anchor products with similar capacities shall be submitted to the engineer of record for approval.

4. Adhesive anchors of the size and embedment shown on the Drawings shall be installed in accordance with the Contract Documents, the manufacturer's recommendations, and the manufacturer's current ICBO report for the anchor. If conflicts exist between these referenced documents, the most stringent requirements shall govern.

5. The Contractor shall locate all existing reinforcing steel and other embedded items contained in the concrete using non-destructive methods and shall position anchor locations to avoid conflicts with existing embedded items. Anchor locations can be adjusted by a maximum of 1 inch from detailed locations to avoid conflicts, unless noted otherwise.

6. Based on field verified locations of reinforcing steel and embedded items, the Contractor shall create templates for each anchor group. Submit template dimensions for review prior to fabrication of connection plates.

7. Holes for anchors shall be drilled in a continuous operation using the bit type and size recommended by the anchor manufacturer. Holes shall be drilled perpendicular to the concrete surface and shall not be enlarged or redrilled at any point along its length. All debris shall be blown out of the holes with compressed air after drilling.

8. All abandoned holes shall be filled with non-shrink grout.

9. Holes in connection plates shall be no more than 1/16" larger than the anchor diameter. If larger holes are required for erection purposes, Contractor shall provide 1/4" x 3" x 3" plate washers sufficiently welded to the connection plate to transfer the specified load.

10. Installation of adhesive anchors shall be continuously inspected by the testing agency to ensure that holes are of specified size, and that bolts are properly installed.

STRUCTURAL STEEL

1. Structural Steel shall conform to ASTM A992 or A572, grade 50 except where A36 is noted on plan, except that miscellaneous plates, angles, and channels may be A572, grade 50 or A36. Steel pipe shall conform to ASTM Specification A 501 or ASTM A 53, Type E or S, Grade B. Steel tube shall conform to ASTM Specification A 500, Grade B, Fy 46 ksi.

2. Anchor bolts shall conform to ASTM F1554 grade 36 ksi.

3. Column base plates shall be grouted with a non-shrink, high strength nonmetallic grout conforming to ASTM C827, and shall have a compressive strenght at 28 days of 5000 psi. Pre-grouting of base plates will not be permitted.

4. Studs shall be Nelson studs type S31 (Fu=65 ksi) or acceptable equal. Studs shall be made from cold drawn steel conforming to ASTM A108.

5. Deformed bar anchors shall be Nelson D2L or KSM deformed bar anchors (or acceptable equal) and shall be made from cold drawn wire per STM A490 conforming to ASTM A108 with minimum yield strength of 70 ksi. Anchors shall be automatically and welded with suitable welding equipment in the shop or in the field. Welding shall be in accordance with the recommendations of Nelson Stud Company or KSM Welding Company.

6. Structural steel detailing, fabrication, and erection shall conform to the AISC "Specification for Steel Buildings" and the AISC "Code of Standard Practice for Steel Buildings and Bridges" except that paragraph 4.2.1 "the owner's acceptance of all responsibility for the design adequacy of any connections designed by the fabricator" is deleted. Typical connection details are indicated in the drawings. The fabricator shall prepare drawings based on these details. If alternate connection designs are used, the fabricator shall have a registered professional engineer prepare the connection designs. Such connection shall bear the engineer's seal and shall be submitted with shop drawings.

7. Splicing of structural steel members is prohibited without prior approval of the Engineer as to location and type of splice to be made. Any member having splice not shown and detailed on shop drawings will be rejected.

8. All welds denoted as moment connection or full penetration weld shall be ultrasonically or x-ray certified by an independent testing agency.

9. Contractor shall coordinate structural steel fireproofing requirements. All interior structural steel, including steel joists, scheduled or indicated to receive spray applied fireproofing shall be delivered to the project site unprimed. Steel exposed to corrosive conditions after installation shall be primed with a protective coating which does not diminish the bond between the spray applied fireproofing, and the steel substrate. Any primer, and/or coating applied to structural steel shall be approved for use in the applicable U.L. Fire Resistance Assembly used on the project. Contractor shall protect any unprimed structural steel from detrimental effects of corrosion, as required, until the steel is enclosed and protected by the new construction.

10. Shop painting: Paint structural steel with one coat of manufacturer's standard red oxide primer applied at a rate to provide a uniform dry film thickness of 2.5 mils.

11. Submittal: Provide drawings showing details for fabrication and shop assembly of members, erection plans and details. Include details of connections, camber, weld profiles and sizes and spacing. Shop and erection drawings shall not be made using reproductions of the contract drawings.

12. Contractor must fabricate and erect steel in accordance with OSHA Safety requirements, 29 CF part 1926 Safety for Steel Erection, Final Rule.

STRUCTURAL STEEL CONNECTIONS

1. Welding shall conform to ANSI/AWS D1.1, latest edition.

2. Bolts conform to ASTM A325. Bolts shall be designed using values for bearing type bolts with thread allowed in the shear plane.

4. Structural steel connections not specifically detailed on the Drawings shall be designed and detailed by the Contractor under the direct supervision of a registered engineer licensed in the State of Texas. Sealed calculations for all connections designed by the Contractor shall be submitted for the Architect's files. Connections that meet the requirements and assumptions presented in our schematic connection details and table can be used at the discretion of the Contractor. The Contractor shall take full responsibility in confirming that the connection tables are used within their limitations and assumptions outlined in the details and notes.

5. Beam connections shall be designed and detailed as follows, unless noted otherwise on the Drawings:
   a. Connections shall be AISC type 2 simple framing connections.

   b. In general, shop connections shall be bolted or welded and field connections shall be bolted.

   c. Where indicated, connections shall be designed for the scheduled shear force, the shear force indicated on the Drawings as "V=", and the horizontal force indicated as "H=".

   d. If not indicated on the Drawings, connections shall be designed for 55 percent of the total load capacity for the beam span shown in the beam tables in Section 2 of the AISC Manual, ninth edition.

   e. The minimum number of rows of bolts shall be 1/8 of the beam depth with any fraction be rounded to the next higher number.

   f. Bolts shall be "snug tight", U.N.O.

   g. Short slotted holes shall be permitted provided washers are installed in accordance with AISC requirements. Washers shall be hardened where A325 bolts are utilized.

7. For connections not specifically addressed by these notes or the Drawings, provide fillet welds at all contact surfaces sufficient to develop the tensile strength of the smaller member at the joint.

8. Moment connections indicated on Drawings as "MC" shall be welded to develop the full capacity of the member on both sides of supporting member.

9. Roof edges angles shall be continuous and shall be spliced only at supports. Splices shall be butt-welded to develop full capacity of the member.

10. Fillet welds with no size specified shall be 3/16", or minimum size required by AISC, whichever is larger.

COMPOSITE WOOD MEMBERS

1. Do not notch joists or beams. Drill holes through webs of engineered wood members for mechanical, electrical or plumbing services in accordance with the recommendations of the engineered wood product manufacturer.

2. Multiple wood beams up to three members thick shall be nailed together with three rows of 16d nails at 12" on center. Four or more multiple wood beams and any multiple wood beams utilizing beams thicker than 13/4" shall be bolted together with 1/2" diameter bolts top and bottom at supports and ends of the beam, then at 24" on center, staggered top and bottom for the full length of the beam.

3. Where multiples of two 13/4" Micro-Lam beams are noted on the drawings, contractor may provide single 31/2" beams in lieu of double 13/4" beams.

4. Provide web stiffeners where required by the manufacturer for the specified support condition.

5. Connectors for double 13/4" beams or single 31/2" beams shall be Simpson "HHU5410" face mounted hangers, typical u.n.o.

PREFABRICATED METAL PLATE CONNECTED WOOD TRUSSES

1. Trusses shall be designed by the Contractor in accordance with the Truss Plate Institute "Design Standard for Metal Plate Connected Wood Truss Construction" (ANSI/TPI 1-95) and shall conform to IBC Section 2303.4.

2.

3. Submittals: Submit product data and proof of ICBO approval for framing members and fasteners that have been designed by others. Submit calculations prepared by an engineer licensed in the state of Texas for all members and connections designed by others along with their respective shop drawings. All necessary bridging, blocking, and blocking panels and web stiffeners shall be detailed and furnished by the supplier. Temporary and permanent bridging shall be installed in conformance to the manufacturer's installation requirements.

a. Metal plate connected roof truss shop drawings shall provide detailed description of shapes, bearing points, hips, and valleys as shown in the drawings. Provide special trusses such as jack-trusses, girder trusses and step down trusses to match drawings. Provide all truss connection details and required connection materials. Provide all truss reactions on shop drawings.

b. Metal plate connected floor truss shop drawings shall provide detailed description of shapes, bearing points, and step downs. Provide all truss connection details and required connection materials. Provide all truss reactions on shop drawings.

4. Truss members shall be stamped in a mechanical or hydraulic jig with sufficient pressure to bring members into reasonable contact at all joints during application of connector plates.

5. Provide adequate erection bracing in accordance with Truss Plate Institute publication HIB-91.

6. Truss Manufacturer shall provide permanent bracing as required by the design of the trusses. Erection bracing may remain in place as permanent bracing where it does not interfere with the architectural finishes.

7. All timber truss members shall be Southern Yellow Pine with a maximum moisture content of 19%. Chord members shall be No. 2 or better and web members shall be No. 3 or better.

8. Connection plates shall be manufactured by a WTCA member plate manufacturer. Plates shall be 20 gauge minimum, ASTM A446 grade A steel, with a G60 galvanized coating.

9. Trusses shall be designed in accordance with the following requirements:

a. Top chords shall be designed to resist the local bending induced by the floor or roof uniform load on the top chord.

b. Limit live load deflection of floor trusses to L/360. Total load deflections shall be limited to L/240.

c. Truss members and connections shall be proportioned with a maximum allowable stress increase for duration of load as follows:

   Roof Loads 25 percent
   Wind Loads 33 percent
   Seismic Loads 33 percent

d. Trusses shall be designed for the superimposed dead and live loads as noted in the Structural Notes and as indicated on the drawings. Dead foads shall not be less than the following:

   Floor 15 psf
   Roof 10 psf

e. Trusses shall be designed for the superimposed wind loads in accordance with the specified building code and the specified basic wind speed, exposure, and importance factor. Increase member sizes or provide additional bridging as required to resist uplift forces.

10. Connect roof trusses to bearing wall or beam support at each end with a type H2.5 framing anchor as manufactured by the Simpson Company or approved equal.

WOOD FRAMING

1. Reference Standards:
   a. IBC Chapter 23 "WOOD"
   b. NDS 2005 National Design Specification for Wood Construction

2. All sawn lumber and pre-manufactured wood products shall be identified by the grade mark or a certificate of inspection issued by the certifying agency.

3. Unless otherwise noted, all structural framing lumber shall be clearly marked No. 2 Southern Yellow Pine, except that non-loadbearing interior walls may be stud grade Southern Yellow Pine, Douglas Fir-Larch, or Spruce-Pine-Fir.

4. All wood headers, beams, and top plates shall be No. 2 Southern Yellow Pine unless otherwise noted.

5. All wood stud walls shall be full height without intermediate plate line unless detailed otherwise.

6. Finger Jointed Studs are acceptable at interior walls only. Load bearing interior walls constructed with finger jointed studs shall be sheathed on at least once face prior to loading. Finger jointed studs shall exceed the material properties and allowable stresses for solid lumber specified for its grade construction.

7. All load bearing walls shall have solid 2x blocking at 10'-0" o.c. maximum vertically. End nail with 2-16d nails or side toe nail with 2-16d nails.

8. Provide double studs at all wall corners and on each side of all openings, unless noted or detailed otherwise.

9. Place a single plate at the bottom and a double plate at the top of all stud walls. Exterior sill plates shall be bolted to the foundation with 1/2" anchor bolts with a minimum embedment of 8" spaced at 4'-0" on center. Provide a minimum of two bolts per plate segment. Sill plates in contact with concrete or masonry shall be pressure treated with a preservative.

10. Timber Connectors shall be Simpson Strong-tie as specified in the latest catalog. Connectors by other manufacturers may be substituted provided such connectors have the current ICC approval for equal or greater load capacities and is submitted for approval by the engineer of record. Connectors shall be installed per the manufacturer's directions.

a. Where straps are used as tie-downs, nail straps to wood just prior to drywall applications, as late as possible in the framing to allow wood shrinkage and allow the building to settle. This will minimize strap buckling and potential finish damage.

b. Where connectors are used in exposed or exterior applications, and when connectors are in contact with preservative treated (PT) lumber, connectors are to be hot dipped galvanized (HDG), mechanically galvanized (ASTM B695, Class 40 or greater) stainless steel, or zinc galvanizing equal or greater to ZMAX Simpson finish.

11. Fasteners shall conform to IBC Section 2304.9 "Connection and Fasteners," unless otherwise noted. Nail according to IBC Section 2304.9.1. Nails shall be common. Alternate nails may be used upon review and approval by structural engineer of record. Staples for the nailing or rated sheathing is subject to review and approval by the structural engineer of record.

12. All bolts and lag screws shall have standard washers. All anchor and expansion bolts used in wood to concrete connections in crawlspace areas shall be hot dip galvanized or stainless steel.

13. Moisture content of all sawn lumber shall have a maximum of 19%, with the exception of the pressure treated wood sill plate. Moisture content can be lower than 19%. Refer to architect's drawings and project specifications and with cladding installer for maximum recommended moisture content.

14. Preservative Treated (PT) wood materials are to be used per IBC Section 2304.11. "Decay and Termite Protection" shall conform to the appropriate standards of the American Wood Preservers Association (AWPA) for sawn lumber. Fasteners, anchors, and connectors touching treated wood shall be either stainless steel or hot-dipped galvanized per IBC section 2304.9.5.

15. Provide double joists under all interior partition walls oriented parallel to the joists.

16. Refer to the architectural drawings for additional wood framing members. Provide additional wood framing members shown on the architectural drawings even though they may not be shown on the structural drawings.

ARBIB HUGHEY DES
2235 EAST 6th ST. 1104 AUSTIN TX 78

LeapfStructures
3001 S. Lamar Blvd., #230
Austin, TX 78704 (512) 290-3999
Registered Texas Firm F-14470

TATSUYA KIUCHI

project t

project name
DAVIDSON RESIDENCE

physical location
1803 CLIFFORD STREET
AUSTIN, TEXAS 78702

owner
Amanda & Graham Davidson
1802 Sanchez Street
Austin, TX 78702
512.880.2987

contractor
TBD

engineer
LEAPISTRUCTURES
3001 S Lamar Blvd. Suite A#230
Austin, TX 78704
512.290.3999

phase info:

set
PERMIT SET

date: 2014.08.01

revisions no

drawin

GENERAL NOTES

S002

2/8/22

FOUNDATION PLAN NOTES:

1. LEVEL 1 T.O.S.C. EL. = 100'-0" EQUALS DATUM ELEVATION = 333'-9"
2. FOR T.O.S.C. ELEVATIONS, REFER TO ARCHITECTURAL DRAWINGS. ELEVATIONS NOTED ON PLAN ARE FOR REFERENCE ONLY. REFER TO AND VERIFY ALL DIMENSIONS AND ELEVATIONS w/ ARCHITECTURAL DRAWINGS.
3. REFER TO THE ARCHITECTURAL DRAWINGS FOR EXACT LOCATIONS OF FLOOR RECESSES, DROPS AND SLOPES NOT DIMENSIONED ON PLAN.
4. REFER TO MECHANICAL, ELECTRICAL, AND PLUMBING DRAWINGS FOR LOCATIONS AND DIMENSIONS OF PENETRATIONS NOT SHOWN OR DIMENSIONED ON PLAN.
5. TOP OF STRUCTURAL CONCRETE ELEVATION IS DENOTED AS FOLLOWS UNLESS OTHERWISE NOTED

   T.O.S.C. EL.=XXX'-XX" — T.O.S.C. EL.=XXX'-XX"

6. STEEL COLUMNS ARE NOTED ON PLAN AS FOLLOWS:

   STEEL COL. SIZE, BP-#

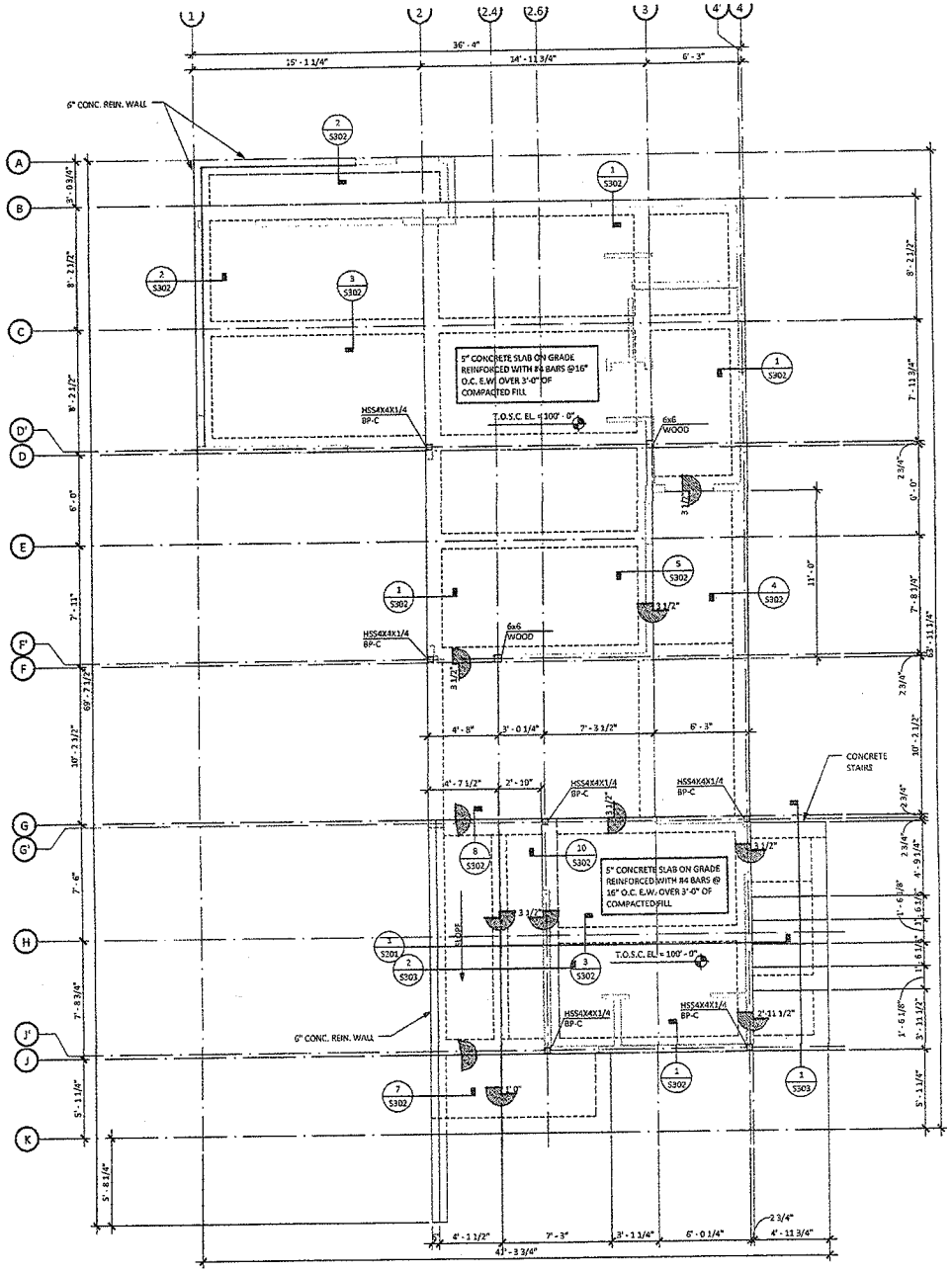

1 LEVEL 01 FOUNDATION PLAN
SCALE: 1/4" = 1'-0"

ARBIB HUGHEY DE
2236 EAST 6th ST #104 AUSTIN, TX

Leap!Structures
2001 S Lamar Blvd. #230
Austin, TX 78704 | 512.209.3999

project name:
DAVIDSON RESIDENCE

physical location:
1803 CLIFFORD STREET
AUSTIN, TEXAS 78702

owner:
Amanda & Graham Davidson
1802 Sanchez Street
Austin, TX 78702
512.633.2987

contractor:
TBD

engineer:
LEAP!STRUCTURES
2001 S Lamar Blvd. Suite A-230
Austin, TX 78704
512.209.3999

set
PERMIT SET

date 2014.08.01

FIRST FLOOR PLAN

S10

2/8/22

PLAN LEGEND:

- STRUCTURAL LOAD BEARING AND/OR SHEAR WALL 2X6 @16" O.C. WOOD WALL BELOW UNLESS OTHERWISE NOTED
- INFILL STUD WALL 2X4 @16" O.C. BELOW
- STRUCTURAL LOAD BEARING AND/OR SHEAR WALL 2X6 @16" O.C. WOOD WALL ABOVE UNLESS OTHERWISE NOTED
- HEADER IN WALL; SEE 3/S604 FOR KING STUDS AND JACK STUDS IN LOAD BEARING WALLS ELEMENT SIZE. FIRST NUMBER INDICATES THICKNESS, SECOND INDICATES WIDTH.
- 2-28 — NUMBER OF ELEMENTS; THUS 2-28 INDICATES (2) 2X8 MEMBERS
- BEAM HANGER
- WOOD CEILING JOIST, TYP. 2x6 @ 2 U.N.O.
- PRE-ENGINEERED WOOD FLOOR TRUSSES
- WOOD RAFTER, TYP. 2x8 @ 2 U.N.O.
- BEAM, REF. PLAN FOR SIZE
- DROP IN FRAMING

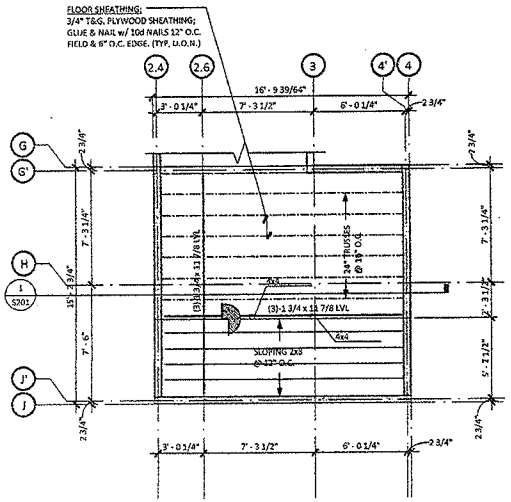

2 LEVEL LOFT
SCALE: 1/4" = 1'-0"

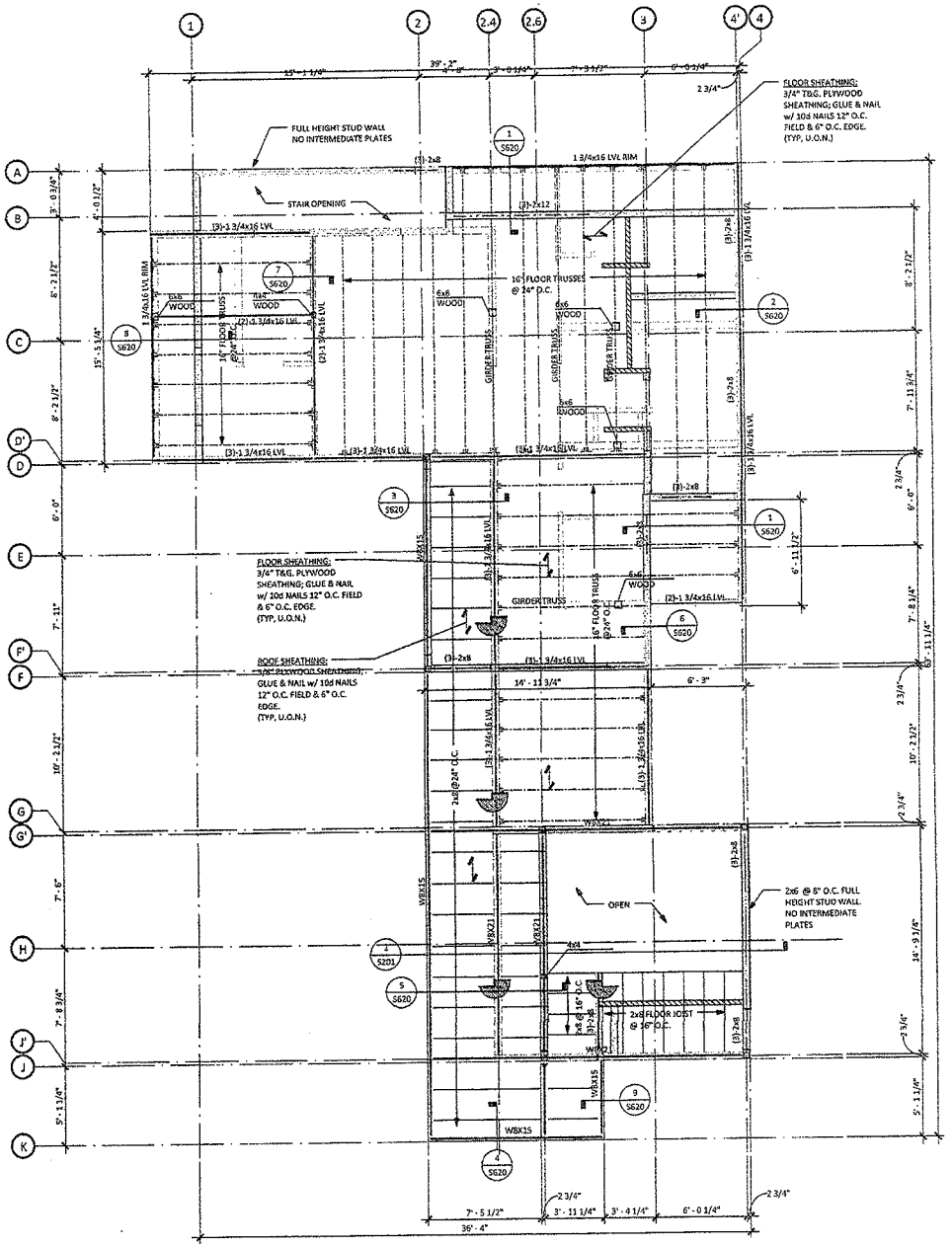

1 SECOND FLOOR FRAMING PLAN
SCALE: 1/4" = 1'-0"

ARBIB HUGHEY DE
2235 EAST 6th ST. 0104 AUSTIN, TX

Leap!Structures

project name:
DAVIDSON RESIDENCE

physical location:
1803 CLIFFORD STREET
AUSTIN, TEXAS 78702

owners:
Amanda & Graham Davidson
1807 Sanchez Street
Austin, TX 78702
512.898.2987

contractor:
TBD

engineer:
LEAP!STRUCTURES
3001 S Lamar Blvd. Suite A-23
Austin, TX 78704
512.298.3999

set:
PERMIT SET

date: 2014.08.01

revisions

SECOND FLO
PLAN

S10

2/8/22

PLAN LEGEND:

- STRUCTURAL LOAD BEARING AND/OR SHEAR WALL 2X6 @16" O.C. WOOD WALL BELOW UNLESS OTHERWISE NOTED
- INFILL STUD WALL 2X4 @16" O.C. BELOW
- STRUCTURAL LOAD BEARING AND/OR SHEAR WALL 2X6 @16" O.C. WOOD WALL ABOVE UNLESS OTHERWISE NOTED
- HEADER IN WALL; SEE 3/S604 FOR KING STUDS AND JACK STUDS IN LOAD BEARING WALLS ELEMENT SIZE. FIRST NUMBER INDICATES THICKNESS, SECOND INDICATES WIDTH.
- 2-28 — NUMBER OF ELEMENTS; THUS 2-28 INDICATES (2) 2X8 MEMBERS
- BEAM HANGER
- WOOD CEILING JOIST, TYP. 2x6 # 2 U.N.O.
- PRE-ENGINEERED WOOD FLOOR TRUSSES
- WOOD RAFTER, TYP. 2x8 # 2 U.N.O.
- BEAM, REF. PLAN FOR SIZE
- DROP IN FRAMING

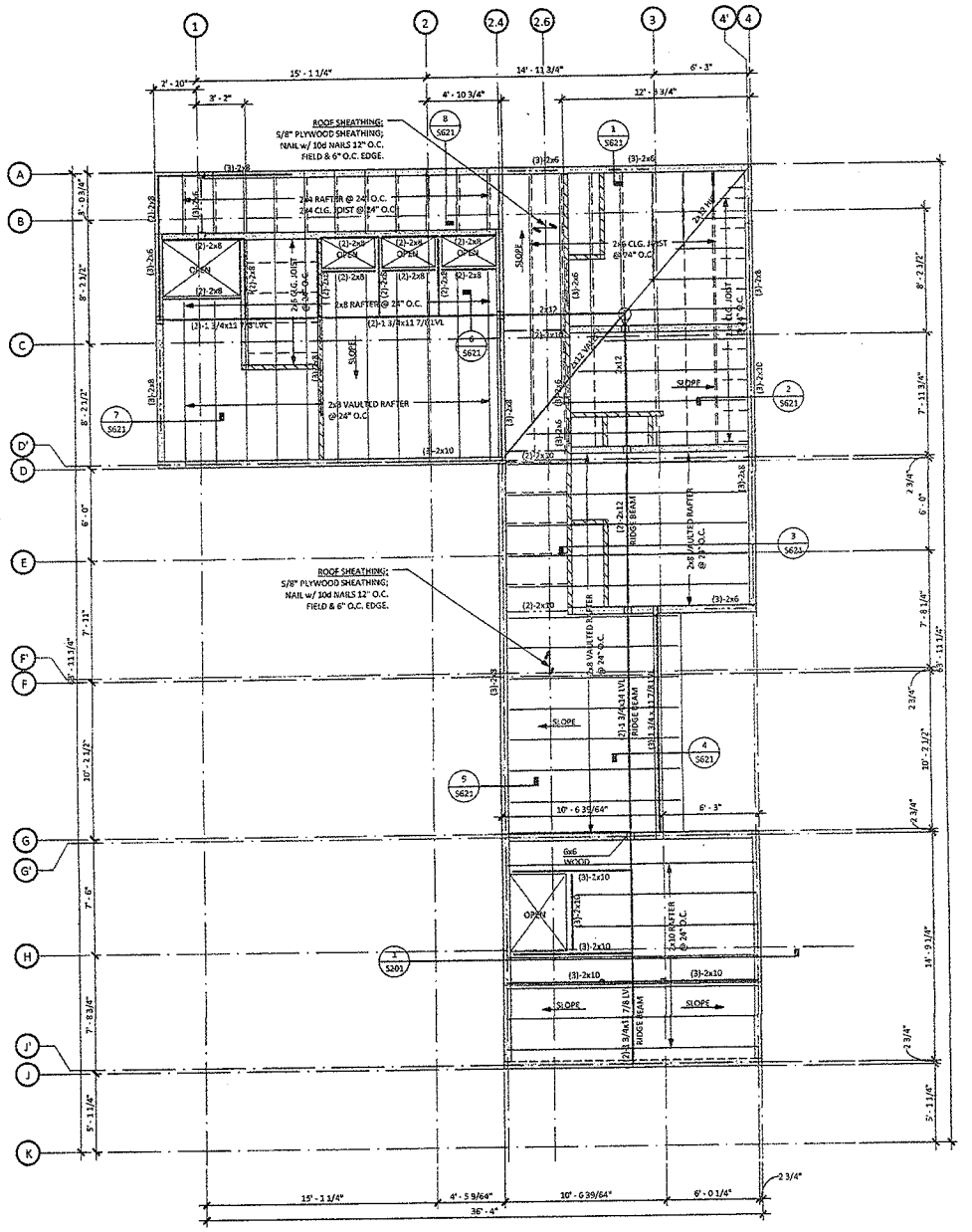

1 ROOF FRAMING PLAN
SCALE: 1/4" = 1'-0"

ARBIB HUGHEY DES
2235 EAST 6th ST. #104 AUSTIN, TX

LeapIStructures
3601 S Lamar Blvd., #230
Austin, TX 78704 (512) 298-3999

project

project name:
DAVIDSON RESIDENCE

physical location:
1803 CLIFFORD STREET
AUSTIN, TEXAS 78702

owner:
Amanda & Graham Davidson
1802 Sanchez Street
Austin, TX 78702
512.698.2987

contractor:
TBD

engineer:
LEAPISTRUCTURES
3601 S Lamar Blvd. Suite A-230
Austin, TX 78704
512.298.3999

phase info:

set
PERMIT SET

date: 2014.08.01

REVISIONS

draw

ROOF PLAN

S10

2/12
8/12

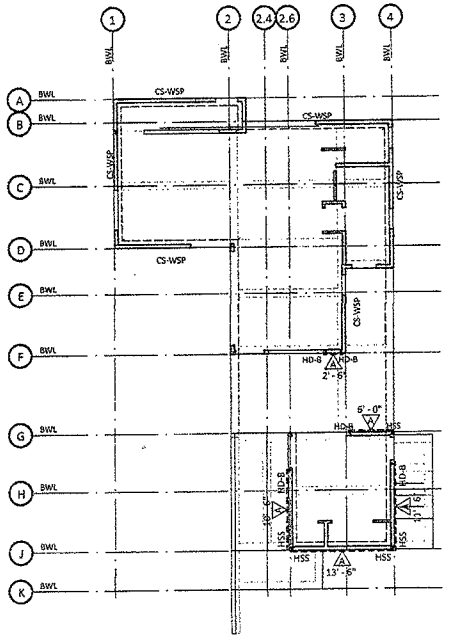

1 LEVEL 01 WALL BRACING PLAN
SCALE: 1/8" = 1'-0"

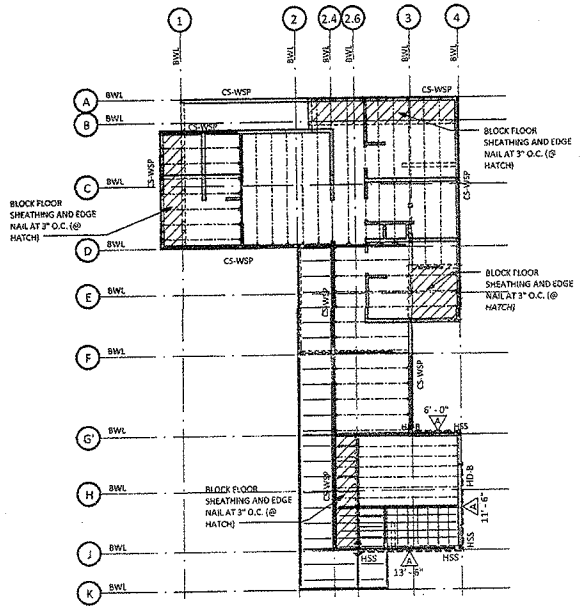

2 SECOND FLOOR WALL BRACING PLAN
SCALE: 1/8" = 1'-0"

BRACING NOTES:

BWL — BRACED WALL LINE

CS-WSP — CONTINUSOULSY SHEATHED WOOD STRUCTURAL PANEL
Solid Sheath entire building and walls along braced wall lines noted on plan with "TYP" shearwall schedule shown on S6.10 unless called as "A". Install horizontal blocking at all panel edges.

SHEAR WALLS ARE NOTED AS FOLLOWS:

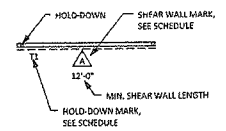

SEE S6.10 FOR ADD'L DETAILS AND INFORMATION

ARBIB HUGHEY DES
2235 EAST 6th ST., #104 AUSTIN, TX 7

LeapStructures
3001 S. Lamar Blvd., #230
Austin, TX 78704-5939
Tel: 512.295.3999
Fax: 512.295.3997

TATSUYA NAGAOKA
06-01-2014

project

project name:
DAVIDSON RESIDENCE

physical location:
1803 CLIFFORD STREET
AUSTIN, TEXAS 78702

owner:
Amanda & Graham Davidson
1800 Sanchez Street
Austin, TX 78702
512.890.2987

contractor:
TBD

architect
LEAPSTRUCTURES
3001 S Lamar Blvd. Suite A-230
Austin, TX 78704
512.295.3999

phase info:

PERMIT SET

date 2014.08.01

revisions

copyr

drawin

BRACING PLA

S104

2/8/02

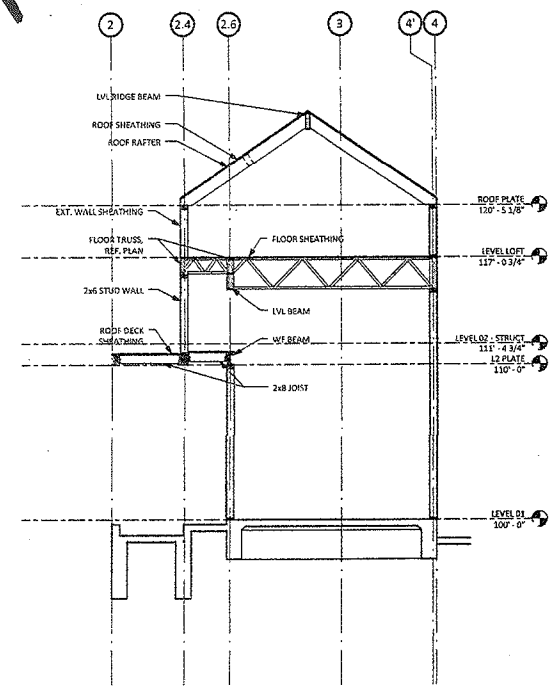

1 Detail 4
SCALE: 1/4" = 1'-0"

ARBIB HUGHEY DESI
2235 EAST 5th ST. #104 AUSTIN, TX 78

LeapStructures
3001 S Lamar Blvd. #230

project in

project name:
DAVIDSON RESIDENCE

physical location:
1603 CLIFFORD STREET
AUSTIN, TEXAS 78702

owner:
Amanda & Graham Davidson
1602 Sanchez Street
Austin, TX 78702
512.688.2987

contractor:
TBD

engineer:
LEAPSTRUCTURES
3001 S Lamar Blvd. Suite A-230
Austin, TX 78704
512.298.3999

phase info:

set
PERMIT SET

date: 2014.08.01

revisions

drawing

SECTIONS

S201

2/5
8/2

DOWEL SCHEDULE			
		B	
		A	
MARK	SIZE	A	B
DWL A	#4	8"	3'-0"
DWL B	#4	2'-6"	3'-0"
DWL C	#4	-	4'-0"
DWL D	#4	8"	6'-0"
DWL E	#4	-	6'-0"

NOTES:

1. SCHEDULED DOWELS ARE MARKED "DWL" ON THE SECTIONS AND DETAILS.
2. DOWEL SPACING TO BE THE SAME AS SLAB OR WALL REINFORCEMENT UNLESS OTHERWISE NOTED ON DETAILS.

1 STANDARD DOWEL SCHEDULE

SCALE: 3/4" = 1'-0"

REINFORCEMENT SPLICE LENGTH SCHEDULE												
	f'c=3000 psi CONCRETE		f'c=4000 psi CONCRETE		f'c=5000 psi CONCRETE		f'c=6000 psi CONCRETE		f'c=7000 psi CONCRETE		f'c=8000 psi CONCRETE	
BAR SIZE \ CLASS	"A"	"B"	"A"	"B"	"A"	"B"	"A"	"B"	"A"	"B"	"A"	"B"
#3	1'-5"	1'-10"	1'-3"	1'-7"	1'-1"	1'-5"	1'-0"	1'-4"	1'-0"	1'-4"	1'-0"	1'-4"
#4	1'-10"	2'-5"	1'-7"	2'-1"	1'-5"	1'-10"	1'-4"	1'-8"	1'-3"	1'-7"	1'-2"	1'-6"
#5	2'-4"	3'-0"	2'-0"	2'-7"	1'-10"	2'-4"	1'-8"	2'-1"	1'-6"	2'-0"	1'-5"	1'-10"
#6	2'-9"	3'-7"	2'-5"	3'-1"	2'-2"	2'-9"	2'-0"	2'-7"	1'-10"	2'-4"	1'-8"	2'-2"
#7	4'-1"	5'-3"	3'-6"	4'-6"	3'-2"	4'-1"	2'-10"	3'-8"	2'-8"	3'-5"	2'-6"	3'-2"
#8	4'-7"	6'-0"	4'-0"	5'-2"	3'-7"	4'-7"	3'-3"	4'-3"	3'-0"	3'-11"	2'-10"	3'-8"
#9	5'-2"	6'-10"	4'-6"	5'-10"	4'-0"	5'-3"	3'-8"	4'-9"	3'-5"	4'-5"	3'-2"	4'-1"
#10	5'-2"	6'-10"	5'-1"	6'-7"	4'-6"	5'-10"	4'-1"	5'-4"	3'-10"	4'-11"	3'-7"	4'-8"
#11	5'-2"	6'-10"	5'-7"	7'-3"	5'-0"	6'-6"	4'-7"	5'-11"	4'-3"	5'-6"	4'-0"	5'-2"

NOTES:

1. WHERE SPLICE TYPE IS NOT INDICATED, USE CLASS "B" SPLICE.
2. LAP LENGTHS LISTED ABOVE APPLY UNDER THE FOLLOWING CONDITIONS:
   A. BEAM & COLUMN BARS ARE SPACED AT LEAST 1 BAR DIAMETERS O.C. WITH CLEAR COVER NOT LESS THAN 1 BAR DIAMETER.
   B. WALL & SLAB BARS ARE SPACED AT LEAST 2 BAR DIA. O.C.
   C. FOR UNCOATED AND ZINC-COATED (GALVANIZED) REINFORCEMENT.
   D. FOR REINFORCEMENT THAT CONFORMS DEFORMED NEW BILLET STEEL BARS IN ACCORDANCE TO ASTM A615 GR. 60.
3. WHERE CLEAR COVER OR CLEAR SPACING FOR MASONRY REINF. IS LESS THAN 5 BAR DIAMETERS, INCREASE SPLICE LENGTHS SHOWN BY MULTIPLYING LENGTHS BY MAX. RATIO OF 5 BAR DIAMETERS TO CLEAR COVER OR SPACING.
4. FOR LIGHTWEIGHT CONCRETE, MULTIPLY TABULATIONS BY 1.3
5. FOR HORIZ. TOP BARS w/ 12" OF CONCRETE CAST BELOW, MULTIPLY TABULATIONS BY 1.3
6. WHERE A LARGER BAR LAPS A SMALLER BAR, THE SMALLER SCHEDULED LAP LENGTH APPLIES U.O.N.
7. REFER TO "CONCRETE REINFORCING" SECTION OF THE GENERAL NOTES FOR FURTHER INFORMATION.
8. FOR MASONRY REINFORCEMENT SPLICE LENGTH SCHEDULE, SEE MASONRY DETAILS.

2 LAP SPLICE SCHEDULE

SCALE: 3/4" = 1'-0"

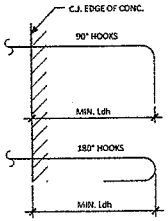

HOOK DEVELOPMENT LENGTH SCHEDULE, Ldh					
BAR SIZE	3000 psi	4000 psi	5000 psi	6000 psi	7000 psi	8000 psi
#3	9"	8"	7"	6"	6"	6"
#4	11"	10"	9"	8"	8"	7"
#5	1'-2"	1'-0"	11"	10"	9"	9"
#6	1'-5"	1'-3"	1'-1"	1'-0"	11"	11"
#7	1'-8"	1'-5"	1'-3"	1'-2"	1'-1"	1'-0"
#8	1'-10"	1'-7"	1'-5"	1'-4"	1'-3"	1'-2"
#9	2'-1"	1'-10"	1'-5"	1'-6"	1'-5"	1'-4"
#10	2'-4"	2'-1"	1'-10"	1'-8"	1'-7"	1'-6"
#11	2'-7"	2'-3"	2'-0"	1'-10"	1'-9"	1'-7"

NOTES:

1. TABULATED VALUES ARE BASED ON GRADE 60 REINFORCING BARS AND NORMAL WEIGHT CONCRETE.
2. FOR TABULATED BARS SIZES ONLY:
   A. IF CONCRETE COVER PER ACI 318-08, SECTION 12.5.3(a), THEN A MODIFICATION FACTOR OF 0.7 MAY BE APPLIED BUT THE LENGTH MUST NOT BE LESS THAN 8 x db NOR 6 IN.
   B. IF HOOK IS ENCLOSED IN TIES OR STIRRUPS PER ACI 318-08, SECTION 12.5.3(b),(c), THEN A MODIFICATION FACTOR OF 0.8 MAY BE APPLIED BUT THE LENGTH MUST NOT BE LESS THAN 8 x db NOR 6 IN.
3. FOR EPOXY-COATED HOOKS, MULTIPLY THE TABULATED VALUES BY 1.2.
4. FOR LIGHTWEIGHT CONCRETE, MULTIPLY THE TABULATED VALUES BY 1.3.

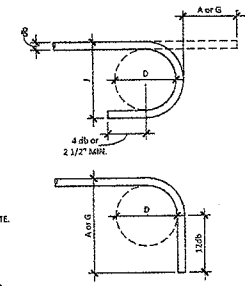

STANDARD HOOK SCHEDULE					
BAR SIZE	D	180° HOOK		90° HOOK	
		A or G	J	A or G
#3	2 1/4"	5"	3"	6"
#4	3"	6"	4"	8"
#5	3 3/4"	7"	5"	10"
#6	4 1/2"	8"	6"	12"
#7	5 1/4"	10"	7"	1'-2"
#8	6"	11"	8"	1'-4"
#9	9 1/2"	1'-3"	11 3/4"	1'-7"
#10	10 3/4"	1'-5"	1'-1 1/4"	1'-10"
#11	12"	1'-7"	1'-2 3/4"	2'-0"

3 STANDARD HOOK SCHEDULE

SCALE: 3/4" = 1'-0"

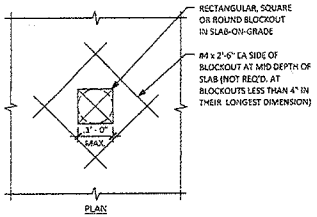

TYPICAL DETAIL - ADDITIONAL REINFORCING AT BLOCKOUT IN SLAB-ON-GRADE

4

SCALE: 3/4" = 1'-0"

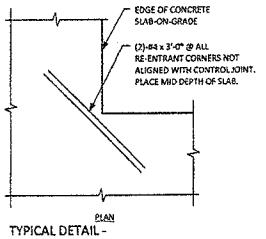

TYPICAL DETAIL - SLAB-ON-GRADE RE-ENTRANT CORNER REINF.

5

SCALE: 3/4" = 1'-0"

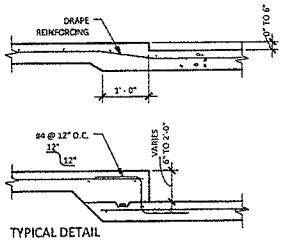

TYPICAL DETAIL DROP IN SLAB-ON-GRADE

6

SCALE: 3/4" = 1'-0"

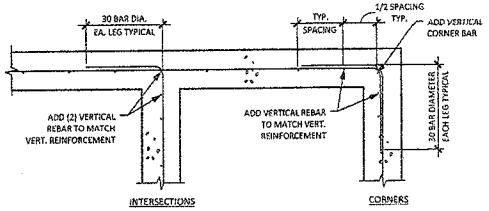

PLAN - ONE CURTAIN OF REINFORCEMENT

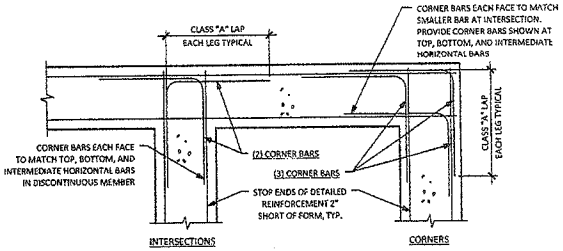

PLAN - TWO CURTAINS OF REINFORCEMENT

NOTES:

1. WHERE 90 DEGREE HOOKS ARE SCHEDULED OR DETAILED FOR BARS, CORNER BARS MAY BE OMITTED FOR THAT LAYER.
2. MATCH SIZE, LOCATION AND NUMBER OF HORIZONTAL BEAM AND WALL BARS, EXCEPT THAT WHERE THERE ARE MORE THAN 2 TOP OR BOTTOM BARS, ONLY THE INSIDE AND OUTSIDE BARS MUST BE MATCHED.

TYPICAL DETAIL WALL OR GRADE BEAM REINFORCING

8

SCALE: 3/4" = 1'-0"

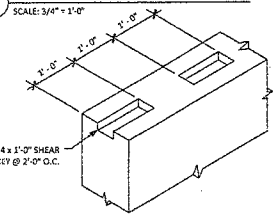

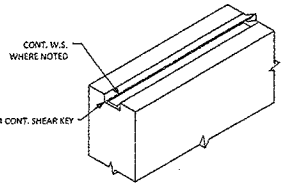

TYPICAL DETAIL INTERMITTENT GRADE BEAM SHEAR KEY AT HORIZONTAL JOINT

9

SCALE: 3/4" = 1'-0"

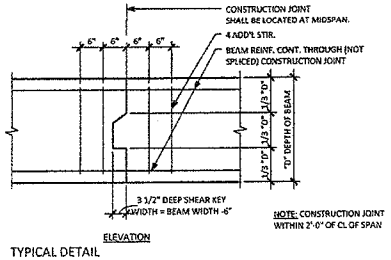

NOTE: CONSTRUCTION JOINT WITHIN 2'-0" OF CL OF SPAN

TYPICAL DETAIL BEAM CONSTRUCTION JOINT

10

SCALE: 3/4" = 1'-0"

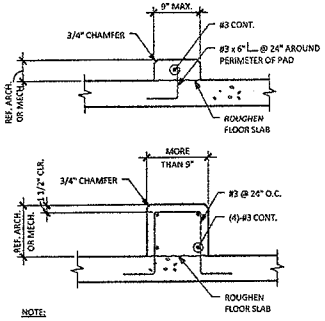

NOTE:

PROVIDE CONSTRUCTION JOINTS @ 20'-0" O.C. MAX.

TYPICAL DETAIL SLAB-ON-GRADE OR STRUCTURAL SLAB CURB

7

SCALE: 3/4" = 1'-0"

ARBIB HUGHEY DES
2235 EAST 6th ST. #104 AUSTIN, TX 7

LeapIStructures
3001 S. Lamar Blvd. #239
Austin, TX 78704 | 512.298.3999
Texas Registration #17594

TATSUYA SUGUCHI
06/13/14

project

project name:
DAVIDSON RESIDENCE

physical location:
1803 CLIFFORD STREET
AUSTIN, TEXAS 78702

owner:
Amanda & Graham Davidson
1802 Sanchez Street
Austin, TX 78702
512.668.2887

contractor:
TBD

engineer:
LEAPISTRUCTURES
3001 S Lamar Blvd. Suite A-239
Austin, TX 78704
512.298.3999

phase

index

PERMIT SET

date: 2014.08.01

revisions

drawing

CONCRETE TYPICAL

S30(

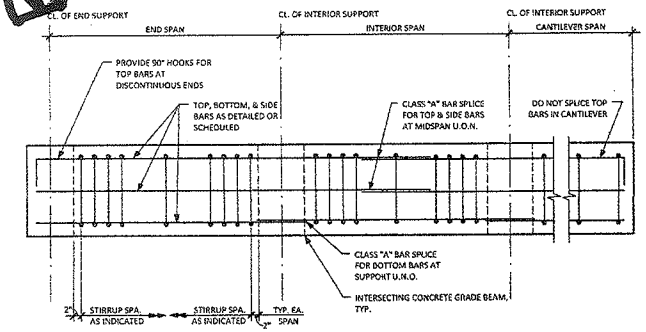

1 TYPICAL DETAIL
GRADE BEAM REINFORCING
SCALE: 3/4" = 1'-0"

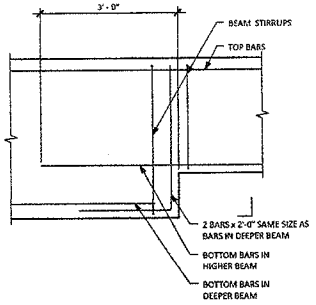

2 TYPICAL DETAIL
STEP IN BOTTOM GRADE BEAM
SCALE: 3/4" = 1'-0"

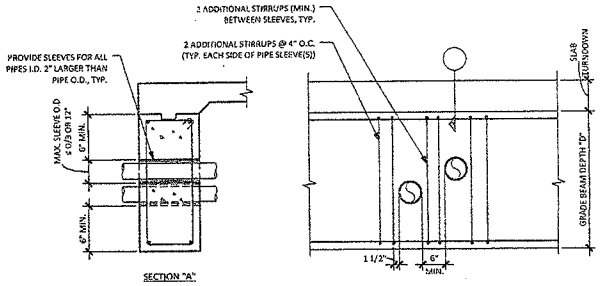

3 TYPICAL DETAIL
HORIZONTAL PIPE PENETRATIONS
THROUGH GRADE BEAM
SCALE: 3/4" = 1'-0"

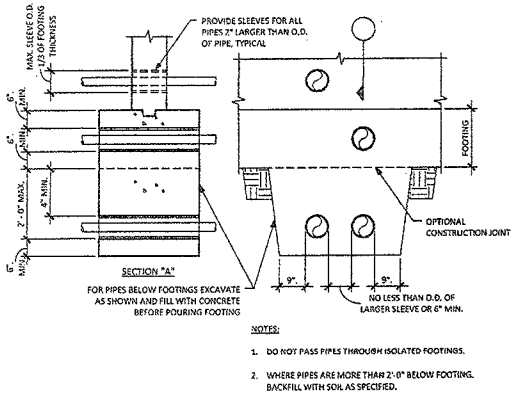

NOTES:

1. DO NOT PASS PIPES THROUGH ISOLATED FOOTINGS.
2. WHERE PIPES ARE MORE THAN 2'-0" BELOW FOOTING, BACKFILL WITH SOIL AS SPECIFIED.

4 TYPICAL DETAIL
HORIZONTAL PIPE PENETRATIONS
THROUGH AND/OR BELOW FOOTINGS
SCALE: 3/4" = 1'-0"

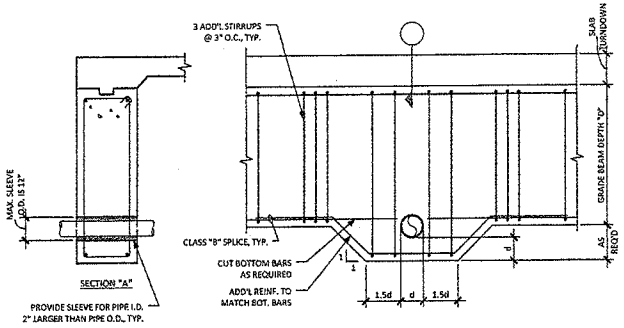

5 TYPICAL DETAIL
HORIZONTAL PENETRATIONS
THROUGH BOTTOM OF GRADE BEAM
SCALE: 3/4" = 1'-0"

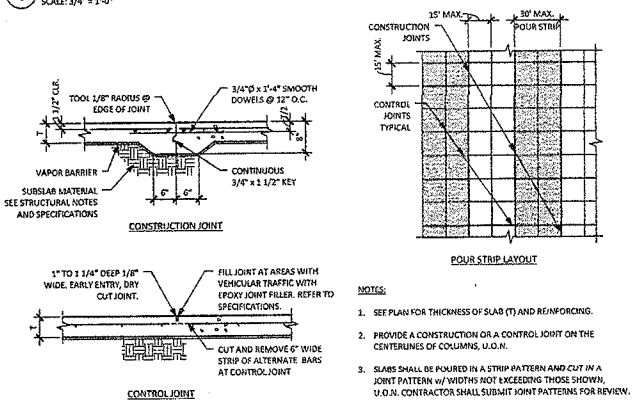

NOTES:

1. SEE PLAN FOR THICKNESS OF SLAB (T) AND REINFORCING.
2. PROVIDE A CONSTRUCTION OR A CONTROL JOINT ON THE CENTERLINES OF COLUMNS, U.O.N.
3. SLABS SHALL BE POURED IN A STRIP PATTERN AND CUT IN A JOINT PATTERN w/ WIDTHS NOT EXCEEDING THOSE SHOWN, U.O.N. CONTRACTOR SHALL SUBMIT JOINT PATTERNS FOR REVIEW.
4. IF METAL FORMS ARE USED, REMOVE THEM BEFORE POURING ADJACENT SLAB.
5. FOR SLABS WITH THICKNESS (T) GREATER THAN 6", THICKENED EDGES ARE NOT REQUIRED AT JOINTS.
6. infill STRIPS CAN BE PLACED AFTER INITIAL SLAB STRIPS HAVE CURED FOR 3 DAYS.

6 TYPICAL DETAIL
SLAB-ON-GRADE
SCALE: 3/4" = 1'-0"

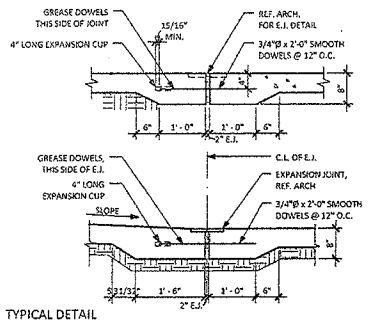

7 TYPICAL DETAIL
EXPANSION JOINT
SCALE: 3/4" = 1'-0"

ARBIB HUGHEY DESIG
2235 EAST 6th ST., #104 AUSTIN, TX 7870

Leap1Structures
3001 S. Lamar Blvd., #230
Austin, TX 78704
(512) 299-3999
TATSUYA HIGUCHI
STATE OF TEXAS
6/12/14

project info

project name:
DAVIDSON RESIDENCE

physical location:
1805 CLIFFORD STREET
AUSTIN, TEXAS 78702

owner:
Amanda & Graham Davidson
1802 Sanchez Street
Austin, TX 78702
512.695.2687

contractor:
TBD

engineer:
LEAP1STRUCTURES
3001 S Lamar Blvd. Suite #230
Austin, TX 78704
512.299.3999

phase info:

set:
PERMIT SET

date: 2014.08.01

revisions	date

drawing title:
CONCRETE TYPICAL

S301

2/8/3

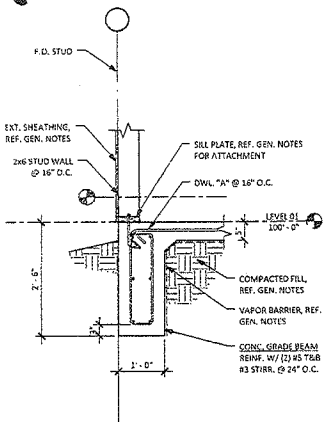

1 FOUNDATION DETAIL 01
SCALE: 3/4" = 1'-0"

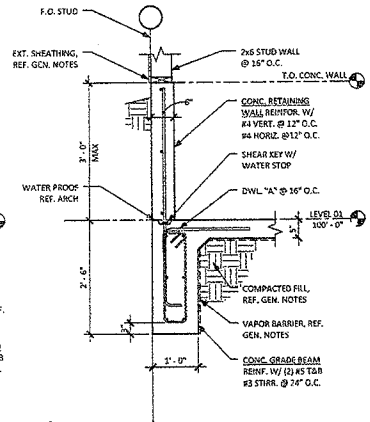

2 FOUNDATION DETAIL 02
SCALE: 3/4" = 1'-0"

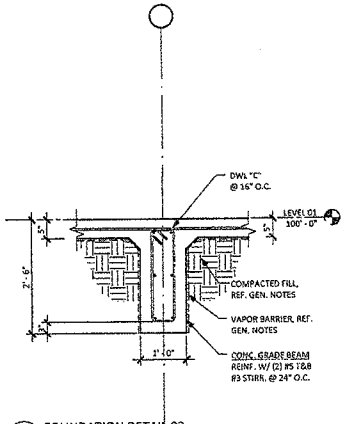

3 FOUNDATION DETAIL 03
SCALE: 3/4" = 1'-0"

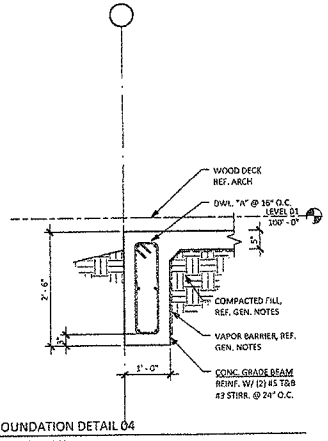

4 FOUNDATION DETAIL 04
SCALE: 3/4" = 1'-0"

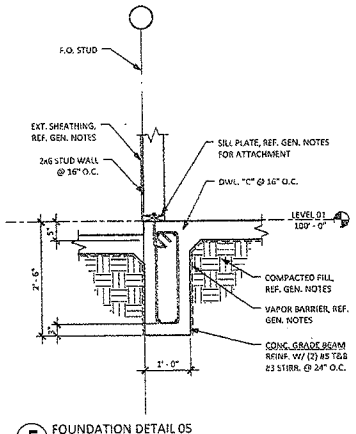

5 FOUNDATION DETAIL 05
SCALE: 3/4" = 1'-0"

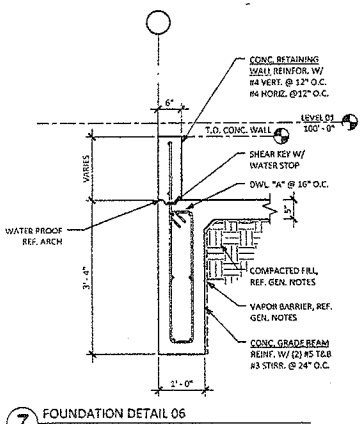

7 FOUNDATION DETAIL 06
SCALE: 3/4" = 1'-0"

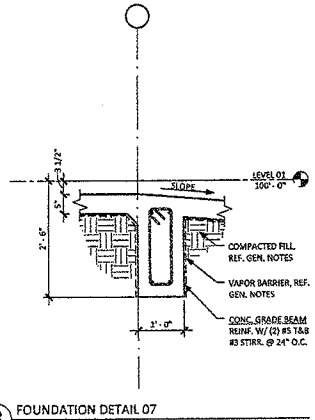

8 FOUNDATION DETAIL 07
SCALE: 3/4" = 1'-0"

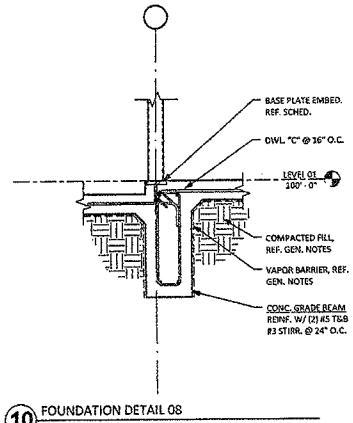

10 FOUNDATION DETAIL 08
SCALE: 3/4" = 1'-0"

ARBIB HUGHEY DESIG
2235 EAST 6th ST. #104 AUSTIN, TX 78702

LeapStructures
3001 S Lamar Blvd. #230

project info

project name:
DAVIDSON RESIDENCE

physical location:
1803 CLIFFORD STREET
AUSTIN, TEXAS 78702

owner:
Amanda & Graham Davidson
1802 Sandoz Street
Austin, TX 78702
512.680.2987

contractor:
TBD

engineer:
LEAPSTRUCTURES
3001 S Lamar Blvd. Suite A-230
Austin, TX 78704
512.298.3999

phase info:

set:
PERMIT SET

date: 2014.08.01

revisions date

drawing in

CONCRETE FOUNDATION

S302

2/8/22

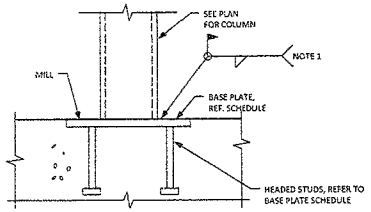

NOTES:
1. WELD TO BE MINIMUM SIZE REQUIRED BY A.I.S.C. FOR THICKNESS OF BASE PLATE USED.
2. SEE DETAIL SCHEDULE FOR BASE PLATE DIMENSIONS.
3. EMBEDMENT PLATE TO BE INSTALLED LEVEL AND FULLY EMBEDDED INTO CONCRETE.

1 TYPICAL DETAIL
COLUMN BASE PLATES
SCALE: 1" = 1'-0"

BASEPLATE SCHEDULE

MARK	BASEPLATE DETAIL	BASEPLATE THICKNESS	ANCHOR BOLTS
BP-A	TYPE A	3/4"	(4) - 3/4" x 6" HEADED STUDS
BP-B	TYPE B	3/4"	(4) - 3/4" x 6" HEADED STUDS
BP-C	TYPE C	3/4"	(4) - 3/4" x 6" HEADED STUDS

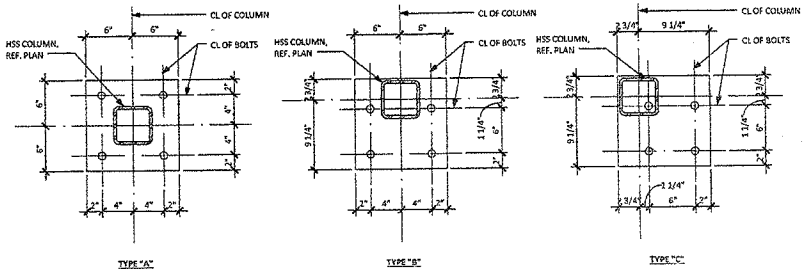

2 SCHEDULE -BASEPLATES
SCALE: 3/4" = 1'-0"

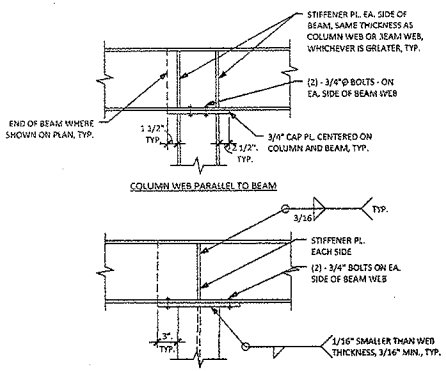

NOTE:
1. CONNECT INTERSECTING BEAMS TO STIFFENER PLATES USING BOLTS IN SINGLE SHEAR DESIGNED FOR ECCENTRIC BEAM REACTION.
2. SEE ROOF PLAN FOR ROOF SLOPE AND SLOPE CAP PLATES ACCORDINGLY.

3 TYPICAL DETAIL
WF COLUMN CAP PLATE TO BEAM CONNECTION
SCALE: 1" = 1'-0"

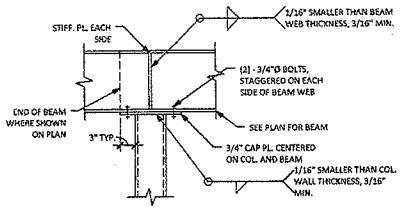

NOTES:
1. SEE ROOF PLAN FOR ROOF SLOPE. SLOPE CAP PLATES ACCORDINGLY.
2. STIFFENER PLATES SHALL BE EQUAL IN THICKNESS TO THE COLUMN WALL THICKNESS OR BEAM WEB THICKNESS, WHICHEVER IS GREATER.
3. CONNECT INTERSECTING BEAMS TO STIFFENER PLATES USING BOLTS IN SINGLE SHEAR DESIGNED FOR ECCENTRIC BEAM REACTION.

4 TYPICAL DETAIL
CAP PLATE-BOLTED CONNECTION
SCALE: 1" = 1'-0"

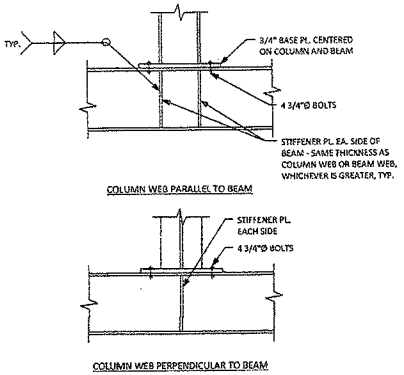

NOTE:
1. CONNECT INTERSECTING BEAMS TO STIFFENER PLATES USING BOLTS IN SINGLE SHEAR DESIGNED FOR ECCENTRIC BEAM REACTION.

5 TYPICAL DETAIL
COLUMN SUPPORTED ON BEAM CONNECTION
SCALE: 1" = 1'-0"

ARBIB HUGHEY DESIG
2225 EAST 6th ST. #104 AUSTIN, TX 7870
LeapIStructures
3001 S LAMAR BLVD. #230
AUSTIN, TEXAS 78704
TATSUYA OGUCHI
2014

project info:

project name:
DAVIDSON RESIDENCE

physical location:
1803 CLIFFORD STREET
AUSTIN, TEXAS 78702

owners:
Amanda & Graham Davidson
1802 Sanchez Street
Austin, TX 78702
512.680.2947

contractor:
TBD

engineer:
LEAPISTRUCTURES
3001 S Lamar Blvd. Suite A-230
Austin, TX 78704
512.298.3698

phase info:

set
PERMIT SET

date 2014.08.01

revisions	date

drawing ti

STEEL TYPICAL DETAILS

S500

2/3
8/3

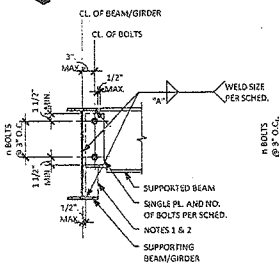

NOTES:

1. IF SUPPORTED BEAM IS LESS THAN 1/2 OF BOLTS TO CONNECTION AT GIRDER.
2. EXTEND TAB PLATE TO BOTTOM FLANGE AT PERIMETER CONDITION.

A ONE-SIDED CONNECTION - BEAMS TO GIRDER

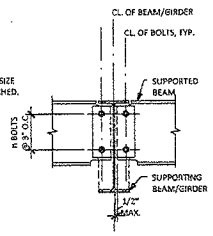

NOTE:

REF. DETAIL "A" FOR INFO NOT SHOWN

B TWO-SIDED CONNECTION - BEAMS TO GIRDER

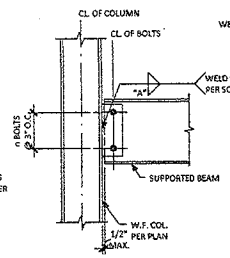

NOTE:

REF. DETAIL "A" FOR INFO NOT SHOWN

C BEAM TO COLUMN FLANGE CONNECTION

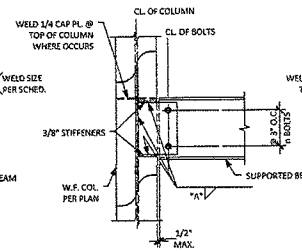

NOTE:

REF. DETAIL "A" FOR INFO NOT SHOWN

D EXTENDED PLATE, BEAM TO COLUMN WEB CONNECTION

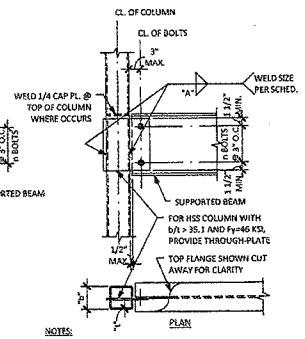

NOTES:

1. PIPE COLUMN CONNECTION IS SIMILAR.
2. SINGLE SHEAR PLATE CONNECTION SHOWN APPLIES TO RIGHT ANGLE CONNECTIONS AND SKEWED CONNECTIONS UP TO 30° FROM RIGHT ANGLE.

E EXTENDED PLATE BEAM TO COLUMN WEB CONNECTION

STANDARD SINGLE PLATE CONNECTION					
BEAM SIZE	NO. OF ROWS OF BOLTS(n)	BOLT DIAMETER	PLATE THICKNESS	WELD SIZE A	MAX. BEAM REACTION (KIPS)
W8	2	3/4"	1/4"	1/4"	12
W10	2				16
W12	3				24
W14	3		5/16"		30
W16	4				40
W18	5				50
W21	6	7/8"	1/4"		73

NOTES:

1. ALL OTHER CONNECTIONS DEVIATING FROM TYPICAL CONNECTIONS SHALL BE DESIGNED AND DETAILED BY A PROFESSIONAL ENGINEER WORKING UNDER THE GUIDANCE OF THE CONTRACTOR. REF. GENERAL NOTES UNDER "STRUCTURAL STEEL CONNECTIONS."
2. NOTED REACTIONS ARE FOR SERVICE LOADS.
3. BOLTS ARE A325N WITH STANDARD HOLES.
4. SCHEDULED SHEAR PLATE CONNECTIONS APPLY TO RIGHT ANGLE CONNECTIONS AND SKEWED CONNECTIONS UP TO 30° FROM RIGHT ANGLE.
5. BEAM CONNECTIONS ARE "STANDARD" UNLESS OTHERWISE NOTED ON PLAN.
6. WORKLINES ARE ON CENTERLINES OF BEAMS AND COLUMNS, U.O.N.
7. WELD CAPACITY BASED ON Exx = 70 KSI.
8. CONTRACTOR RESPONSIBLE FOR MEETING ALL O.S.H.A. REQUIREMENTS.

F SINGLE PLATE CONNECTION SCHEDULE

TYPICAL DETAIL
1 SCHEMATIC SINGLE-PLATE FRAMING CONNECTIONS
SCALE: 1" = 1'-0"

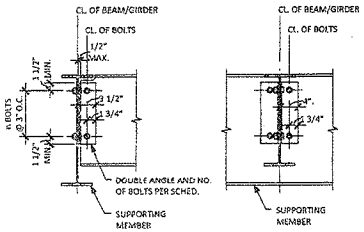

1 ALL BOLTED CONNECTION

A BEAM TO BEAM CONNECTIONS

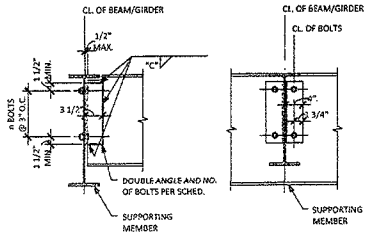

2 BOLTED/WELDED CONNECTION: ANGLES WELDED TO SUPPORTED BEAM

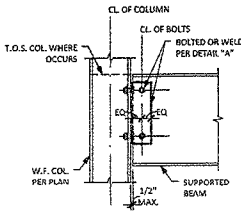

NOTE:

REF. DETAIL "A" FOR INFO NOT SHOWN

B BEAM TO COLUMN FLANGE CONNECTION

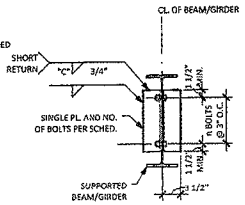

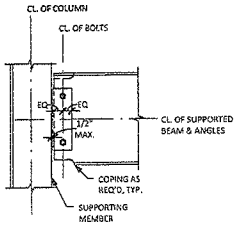

C BOLTED/WELDED DOUBLE ANGLE CONNECTION: ANGLES WELDED TO SUPPORTING MEMBER

STANDARD DOUBLE ANGLE CONNECTION					
BEAM SIZE	NO. OF ROWS OF BOLTS(n)	BOLT DIAMETER	ANGLE THICKNESS	WELD SIZE C	MAX. BEAM REACTION (KIPS)
W8	2	3/4"	1/4"	3/4"	12
W10	2				16
W12	3				24
W14	3				30
W16	4				40
W18	5				50
W21	6				73
W24	7				85

NOTES:

1. REFERENCE SCHEMATIC DETAILS OF TYPICAL STEEL CONNECTIONS FOR ADD'L INFO.
2. ALL OTHER CONNECTIONS DEVIATING FROM TYPICAL CONNECTIONS SHALL BE DESIGNED AND DETAILED BY A PROFESSIONAL ENGINEER WORKING UNDER THE GUIDANCE OF THE CONTRACTOR. REF. GENERAL NOTES UNDER "STRUCTURAL STEEL CONNECTIONS."
3. NOTED REACTIONS ARE FOR SERVICE LOADS.
4. BOLTS ARE A325N WITH STANDARD HOLES.
5. SCHEDULED SHEAR PLATE CONNECTIONS APPLY TO RIGHT ANGLE CONNECTIONS AND SKEWED CONNECTIONS UP TO 30° FROM RIGHT ANGLE.
6. BEAM CONNECTIONS ARE "STANDARD" UNLESS OTHERWISE NOTED ON PLAN.
7. WORKLINES ARE ON CENTERLINES OF BEAMS AND COLUMNS, U.O.N.
8. WELD CAPACITY BASED ON Exx = 70 KSI.
9. TABLE BASED ON L14x31/2, A36 STEEL.
10. CONTRACTOR RESPONSIBLE FOR MEETING ALL O.S.H.A. REQUIREMENTS.

D DOUBLE ANGLE CONNECTION SCHEDULE

TYPICAL DETAIL
2 SCHEMATIC DOUBLE-ANGLE FRAMING CONNECTIONS
SCALE: 1" = 1'-0"

ARBIB HUGHEY DESI
2235 EAST 6th ST. #104 AUSTIN, TX 787

LeapStructures
3001 S Lamar Blvd. #230
Austin, TX 78704 (512) 296-3999
FB-PE 4201 | FB-SE 4201

NATASHA KIRCHI
08/01/2014

project info

project name:
DAVIDSON RESIDENCE

physical location:
1803 CLIFFORD STREET
AUSTIN, TEXAS 78702

owner:
Amanda & Graham Davidson
1802 Sanchez Street
Austin, TX 78702
512.698.2987

contractor:
TBD

engineer:
LEAPSTRUCTURES
3001 S Lamar Blvd. Suite A-230
Austin, TX 78704
512.296.3999

phase info:

PERMIT SET

date: 2014.08.01

revisions | copy

copyright

drawing

STEEL TYPICAL DETAILS

S501

2/8/13

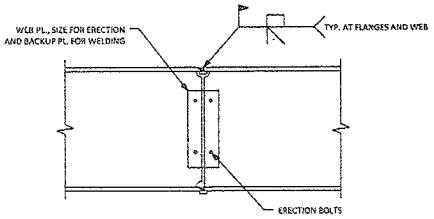

1 TYPICAL DETAIL
MOMENT CONNECTION
SCALE: 1" = 1'-0"

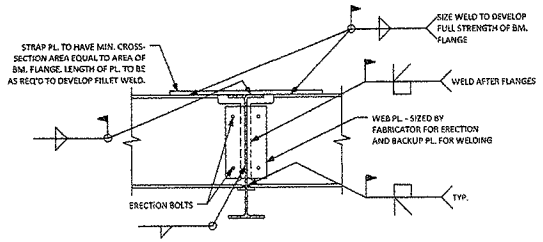

2 TYPICAL DETAIL
MOMENT CONNECTION1
SCALE: 1" = 1'-0"

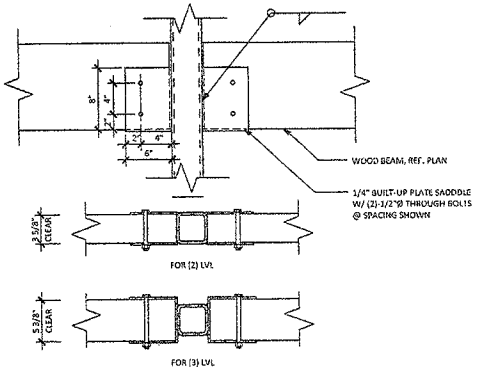

3 TYPICAL DETAIL- PLATE SADDLE CONX. TO STEEL COLUMN
SCALE: 1 1/2" = 1'-0"

ARBIB HUGHEY DES
2235 EAST 6th ST. #104 AUSTIN, TX 7

LeapIStructures
3001 S Lamar Blvd. #235

project i

project name:
DAVIDSON RESIDENCE

physical location:
1803 CLIFFORD STREET
AUSTIN, TEXAS 78702

owner:
Amanda & Graham Davidson
1802 Sanchez Street
Austin, TX 78702
512.699.2987

contractor:
TBD

engineer:
LEAPISTRUCTURES
3001 S Lamar Blvd. Suite A-230
Austin, TX 78704
512.298.3999

phase info:

set
PERMIT SET

date: 2014.08.01

REVISIONS date

drawing

STEEL TYPICAL DETAILS

S502

2/8/13

FASTENER SCHEDULE FOR STRUCTURAL MEMBERS

ITEM	DESCRIPTION OF BUILDING ELEMENTS	NUMBER AND TYPE OF FASTENER	SPACING OF FASTENERS
	ROOF		
1	Blocking between joists or rafters to top plate, toe nail	3-8d (2-1/2" x 0.113")	--
2	Ceiling joists to plate, toe nail	3-8d (2-1/2" x 0.113")	--
3	Ceiling joists not attached to parallel rafter, laps over partitions, face nail	3-10d	--
4	Collar tie to rafter, face nail or 11/4" x 20 gage ridge strap	3-10d (3" x 0.128")	--
5	Rafter or roof truss to plate, toe nail	3-16d box nails (3 1/2" x 0.135") or 3-10d common nails (3" x0.148")	2 toe nails on one side and 1 toe nail on opposite side of each rafter or truss
6	Roof rafters to ridge, valley or hip rafters: toe nail face nail	4-16d (3 1/2" X 0.135") 3-16d (3 1/2" X 0.135")	--
	WALL		
7	Built-up studs-face nail	10d (3" x 0.128")	24" o.c.
8	Abutting studs at intersecting wall corners, face nail	16d (3 1/2" x 0.135")	12" o.c.
9	Built-up header, two pieces with 1/2" spacer	16d (3 1/2" x 0.135")	16" o.c. along each edge
10	Continued header, two pieces	16d (3 1/2" x 0.135")	16" o.c. along each edge
11	Continuous header to stud, toe nail	4-8d (2 1/2" x 0.113")	--
12	Double studs, face nail	10d (3" x 0 128")	24" o.c.
13	Double top plates, face nail	16d (3" x 0.128")	16" o.c.
14	Double top plates, minimum 24-inch offset of end joints, face nail in lapped area	8-16d (31/2" x 0.135")	--
15	Sole plate to joist or blocking, face nail	16d (3 1/2" X 0.135")	16" o.c.
16	Sole plate to joist or blocking at braced wall panels	3-16d (3 1/2" x 0.135")	16" o.c.
17	Stud to sole plate, toe nail	3-8d (2 1/2" x 0.113") or 2-16d (3 1/2" x 0.135")	--
18	Top or sole plate to stud, end nail	2-16d (3 1/2" x 0.135")	2-16d (31/2" x 0.135")
19	Top plates, laps at corners and intersections, face nail	2-10d (3" x 0.128")	--
20	1" brace to each stud and plate, face nail	2-8d (2 1/2" x 0.113") 2 staples 1 3/4"	--
21	1" x 6" sheathing to each bearing, face nail	2-8d (2 1/2" x .113") 2 staples 1 3/4"	--
22	1" x 8" sheathing to each bearing, face nail	2-8d (2 1/2" x .113") 3 staples 1 3/4"	--
23	Wider than 1" x 8" sheathing to each bearing, face nail	3-8d (21/2" x 0.113") 4 staples 1 3/4"	--
	FLOOR		
24	Joist to sill or girder, toe nail	3-8d (2 1/2" x 0.113")	--
25	Rim joist to top plate, toe nail (roof applications also)	8d (2 1/2" x 0.113")	6" o.c.
26	Rim joist or blocking to sill plate, toe nail	8d (2 1/2" x 0.113")	6" o.c.
27	1" x 6" subfloor or less to each joist, face nail	2-8d (2 1/2" x 0.113") 2 staples 1 3/4"	--
28	2" subfloor to joist or girder, blind and face nail	2-16d (3 1/2" x 0.135")	--
29	2" planks (plank & beam - floor & roof)	2-16d (3 1/2" x 0.135")	at each bearing
30	Built-up girders and beams, 2-inch lumber layers	10d (3" x 0.128")	Nail each layer as follows: 32" o.c. at top and bottom and staggered. Two nails at ends and at each splice.
31	Ledger strip supporting joists or rafters	3-16d (3 1/2" x 0.135")	At each joist or rafter

1 FASTENER SCHEDULE FOR WOOD STRUCTURAL MEMBERS
SCALE: 3/4" = 1'-0"

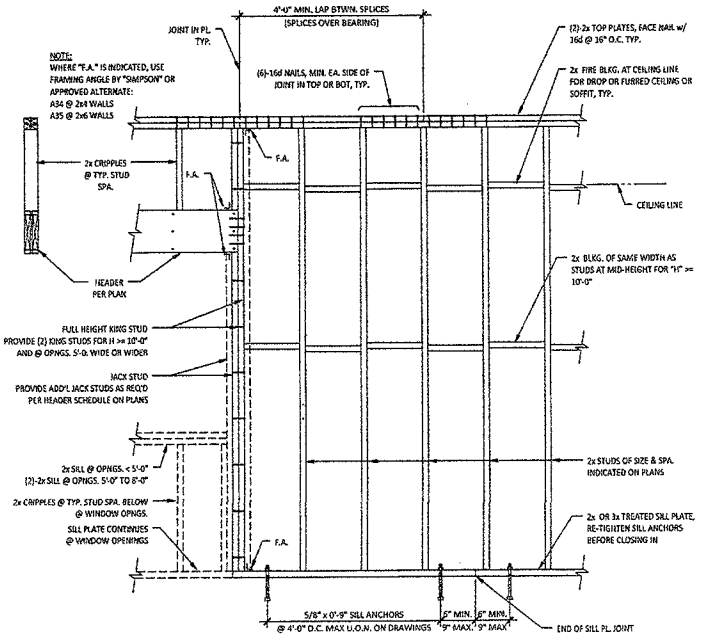

NOTE:
SILL PLATES PLATES FOR INTERIOR WALLS MAY BE ANCHORED BY USE OF 0.145"DIA. POWDER-ACTUATED FASTENERS @ 32" O.C. MAX. w/ MIN. PENETRATION OF 1-1/2" INTO CONCRETE, AT CONTRACTOR'S OPTION. OPTIONAL ANCHORS SHALL NOT BE USED IN CURBS, ADJACENT TO DEPRESSED SLABS, IN EXTERIOR WALLS, OR IN SHEAR WALLS.

2 TYPICAL DETAIL WOOD STUD BEARING WALL FRAMING
SCALE: 3/4" = 1'-0"

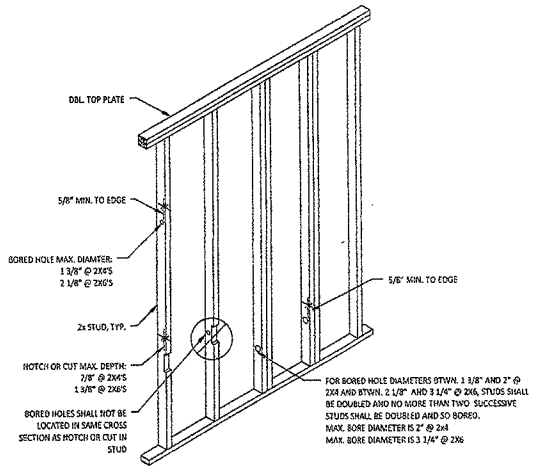

3 TYPICAL DETAIL NOTCH, CUT AND BORE LIMITATIONS FOR WOOD STUDS IN BEARING WALLS
SCALE: 3/4" = 1'-0"

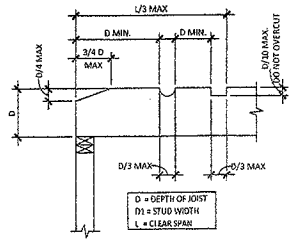

NOTES:
1. NOTCH CUTS ALLOWED IN TOP OF JOISTS ONLY - NOTIFY ENGINEER PRIOR TO CUTTING BEAMS - TYP. U.N.O.

2. THIS DETAIL DOES NOT APPLY TO ENGINEERED WOOD "I" JOISTS.

4 TYPICAL DETAIL NOTCHES IN JOIST
SCALE: 3/4" = 1'-0"

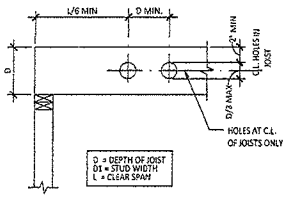

NOTES:
1. HOLE CUTS ALLOWED IN JOISTS ONLY - NOTIFY ENGINEER PRIOR TO CUTTING BEAMS - TYP. U.N.O.

2. THIS DETAIL DOES NOT APPLY TO ENGINEERED WOOD "I" JOISTS.

5 TYPICAL DETAIL BORED HOLES IN JOISTS

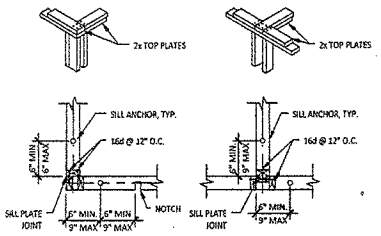

NOTE:
SEE SHEARWALL TYPICAL DETAILS FOR HOLD-DOWN ANCHORS AT CORNERS AND SILL ANCHOR SPACING FOR SHEAR WALLS.

6 TYPICAL DETAIL CORNERS AND INTERSECTIONS @ 2X4 WOOD STUD WALLS

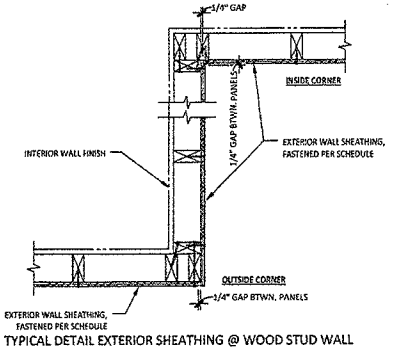

7 TYPICAL DETAIL EXTERIOR SHEATHING @ WOOD STUD WALL CORNERS

ARBIB HUGHEY DESI
2235 EAST 6th ST. #104 AUSTIN, TX 78

Leap!Structures
3001 S.Lamar Blvd. #230
Austin, Texas 78704
512.298.3999

project in

project name/
DAVIDSON RESIDENCE

physical location:
1903 CLIFFORD STREET
AUSTIN, TEXAS 78702

owner:
Amanda & Graham Davidson
1902 Sanchez Street
Austin, TX 78702
512.686.2987

contractor:
TBD

engineer:
LEAP!STRUCTURES
3001 S Lamar Blvd. Suite A-230
Austin, TX 78704
512.298.3999

phase info:

set
PERMIT SET

date 2014.08.01

revisions	date

drawing

WOOD TYPICAL DETAILS

S600

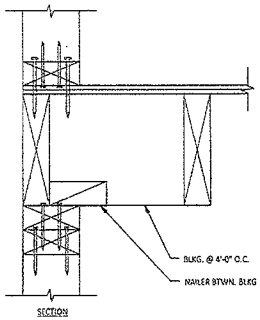

1 TYPICAL DETAIL PERIMETER CONDITION FLOOR JOIST PARALLEL TO WALL
SCALE: 3/4" = 1'-0"

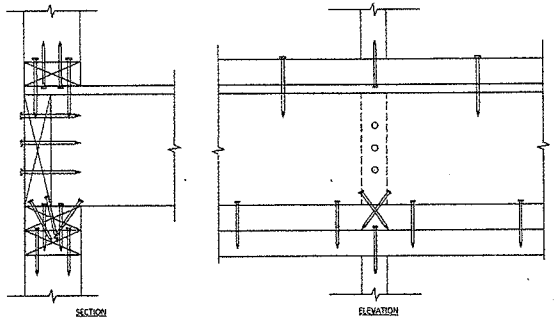

2 TYPICAL DETAIL PERIMETER CONDITION FLOOR JOIST PERPENDICULAR TO WALL
SCALE: 3/4" = 1'-0"

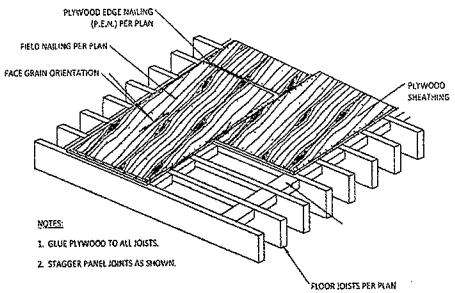

3 FLOOR DIAPHRAGM NAILING WITH BLOCKING
SCALE: 3/4" = 1'-0"

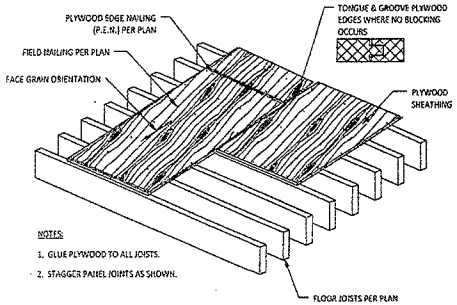

4 FLOOR DIAPHRAGM NAILING WITHOUt BLOCKING
SCALE: 3/4" = 1'-0"

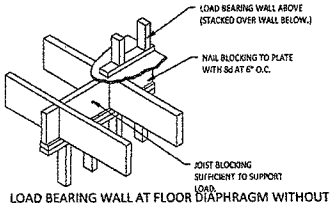

5 LOAD BEARING WALL AT FLOOR DIAPHRAGM WITHOUT BLOCKING
SCALE: 3/4" = 1'-0"

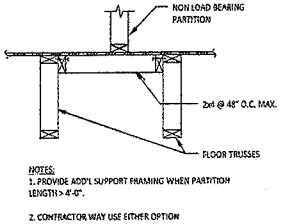

6 NON-LOAD BEARING PARTITION WALL PARALLEL TO SUPPORT
SCALE: 3/4" = 1'-0"

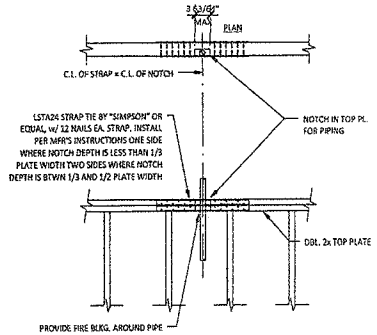

7 TYPICAL DETAIL NOTCHES AT TOP PLATE TO ACCOMODATE PIPING
SCALE: 3/4" = 1'-0"

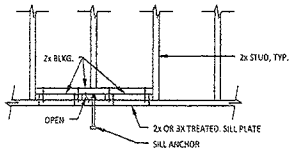

8 DETAIL WHERE SILL ANCHOR OCCURS AT STUD
SCALE: 3/4" = 1'-0"

ARBIB HUGHEY DES
2235 EAST 6th ST. #104 AUSTIN, TX 78

Leap!Structures
3001 S.Lamar Blvd. #230
Austin, TX 78704
512.288.3999

STATE OF TEXAS
TATSUYA KUCHI
90137
08-8-2014

project #

project name:
DAVIDSON RESIDENCE

physical location:
1603 CLIFFORD STREET
AUSTIN, TEXAS 78702

owner:
Amanda & Graham Davidson
1602 Sanchez Street
Austin, TX 78702
512.698.2987

contractor:
TBD

engineer:
LEAPISTRUCTURES
3001 S Lamar Blvd. Suite A-230
Austin, TX 78704
512.288.3999

phase info:

set:
PERMIT SET

date: 2014.08.01

revisions date

copyright

drawing

WOOD TYPICAL DETAILS

S601

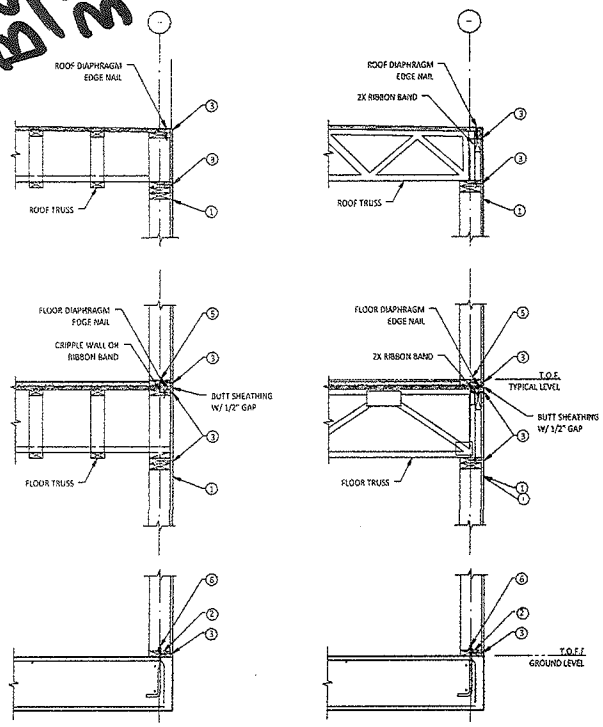

SHEAR WALL SCHEDULE - CS-WSP						
MARK	SHEATHING ①	WALL FRAMING ②	EDGE NAILING (P.E.N.) ③	FRAMING NAILING ④	SOLE PLATE NAILING 2 ROWS ⑤	ANCHOR BOLTS (A.B.) W/ WASHERS ⑥
A	15/32" APA RATED CDX	2x STUDS 2X MUDSILL	10d @ 3" O.C.	LTP4 OR A35 @ 8" O.C.	16d @ 2" O.C.	5/8" DIA. X 12" @ 16" O.C.
TYP	15/32" APA RATED CDX	2x STUDS 2X MUDSILL	10d @ 6" O.C.	LTP4 OR A35 @ 16" O.C.	16d @ 4" O.C.	5/8" DIA. X 12" @ 48" O.C.

NOTES:

1. PRIOR TO CONSTRUCTION OF SHEARWALLS, REVIEW LATEST DIMENSIONED ARCHITECTURAL DRAWINGS AND NOTIFY STRUCTURAL ENGINEER OF ANY LOCATIONS WHERE MINIMUM SHEARWALL LENGTHS ARE NOT MET. MINIMUM LENGTHS BASED ON OUT TO OUT FACE OF TIEDOWN POSTS.
2. ALL SHEAR WALL PANEL NAILS TO BE 10d COMMON 2 1/8" LENGTH SMOOTH SHANK PLYWOOD NAILS, TYP. U.O.N.
3. FIELD NAILING TO BE 10d @ 12" O.C. @ SHEARWALL PLYWOOD PANELS, TYP.
4. SEE PLANS FOR SHEARWALL TIE DOWNS, SIZES AND LOCATIONS.
5. PLACE SHEATHING ON SIDE OF WALL WHERE SHEARWALL SYMBOL OCCURS.
6. HORIZONTAL PLYWOOD SPLICES TO OCCUR AT RIBBON BAND. WHERE WALL HEIGHT DICTATES HORIZONTAL SPLICE AT WALL, PROVIDE 3x BLOCKING. DO NOT SPLICE AT DOUBLE 2x TOP PLATE.
7. USE 2x STUDS, DOUBLE TOP PLATE AND SOLE PLATE, U.N.O.
8. SEE DETAIL FOR TYPICAL SHEARWALL DETAIL AT INTERSECTING PARTITION WALL.
9. SHEATHING THICKNESS IS NOMINAL, ACTUAL THICKNESS EQUIVALENTS ARE 1/2" = 15/32", 5/8" = 19/32", 3/4" = 23/32"
10. WALL SECTIONS ABOVE ARE DIAGRAMS, SEE DETAILS FOR INFO. NOT SHOWN.
11. INSTALL (2)-2x STUDS OR 3x STUD AT EDGE OF PLYWOOD PANELS WHERE EDGE NAILING IS LESS THAN 6" O.C.

4 SHEAR WALL SCHEDULE

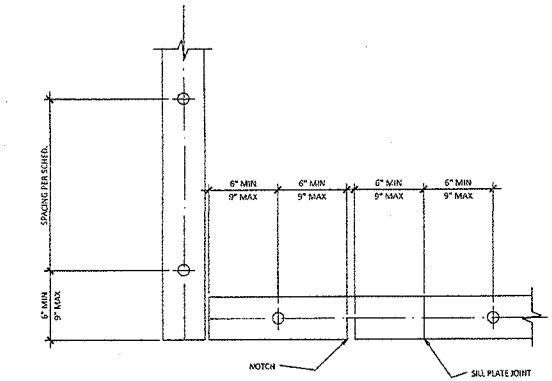

3 TYPICAL SILL PLATE BOLT LAYOUT
SCALE: 1 1/2" = 1'-0"

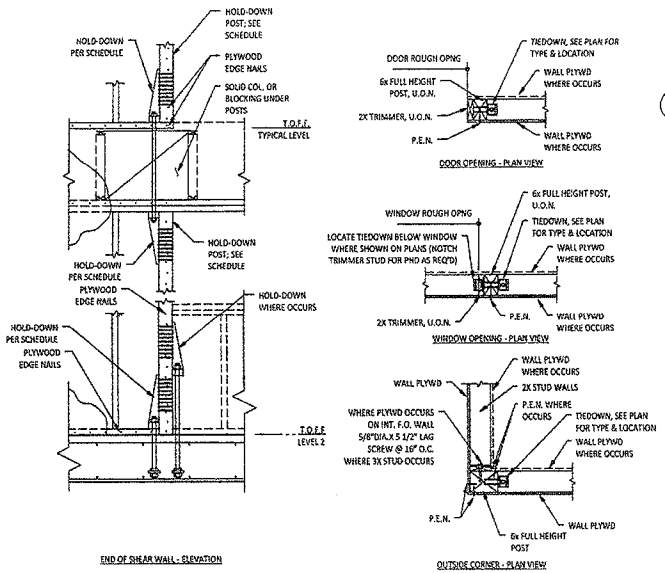

MARK	HOLDOWN TYPE	HOLDOWN ANCHOR BOLT	POST	CAPACITY (LBS)
HD1	HD12-8	1" DIA. x 24" THRD ROD W/ 3"x3"x1/4" PL WASHER	FOR 2x6 WALL,6x6	13335
HD2	HDU8-SDS2.5	7/8" DIA. THRD. ROD W/ 3"x3"x1/4" PL WASHER	FOR 2x6 WALL, 6x6	7870
HD3	HDU2-SDS2.5	5/8" DIA. THRD. ROD W/ 3"x3"x1/4" PL WASHER	FOR 2x4 WALL, 4x4 FOR 2x6 WALL, 4x6	3075
HD4	MSTC52	N/A	FOR 2x4 WALL, 4x6 FOR 2x6 WALL, 4x6	N/A

NOTE: SCHEDULED HOLDOWNS ARE PRE-DEFLECTED STEEL HOLDOWN ANCHORS BY "SIMPSON STRONG-TIE."
USE GALVANIZED HOLD DOWNS WHEN IN CONTACT WITH FIRE RETARDANT TREATED WOOD.

2 SHEAR WALL HOLD DOWN SCHEDULE

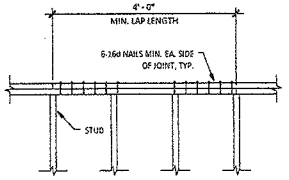

4 TYPICAL DOUBLE TOP PLATE SPLICE NAILING
SCALE: 3/4" = 1'-0"

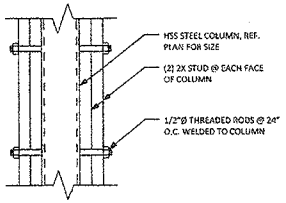

5 TYPICAL DETAIL - STUD TO STEEL COLUMN ATTACHMENT AT HSS HOLD DOWN
SCALE: 1 1/2" = 1'-0"

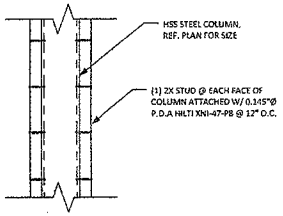

6 TYPICAL DETAIL- STUD TO STEEL COLUMN ATTACHMENT
SCALE: 1 1/2" = 1'-0"

ARBIB HUGHEY DESI
2236 EAST 6th ST. #104 AUSTIN, TX 78

Leap!Structures
3001 S Lamar Blvd. #230
Austin, Texas 78704
Texas Registration # F-9414

TATSUTA KIKUCHI
04/15/2014

project in

project name:
DAVIDSON RESIDENCE

physical location:
1803 CLIFFORD STREET
AUSTIN, TEXAS 78702

owner:
Amanda & Graham Davidson
1802 Sanchez Street
Austin, TX 78702
512.658.2987

contractor:
TBD

engineer:
LEAPISTRUCTURES
3001 S Lamar Blvd. Suite A#230
Austin, TX 78704
512.298.3999

phase info:

set:
PERMIT SET

date: 2014.08.01

revisions date

drawing

WOOD FRAMING SHEARWALL

S610

2/8/23

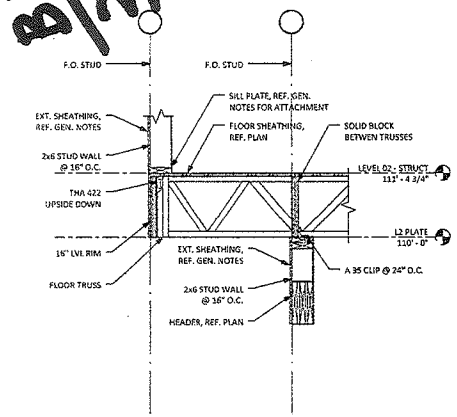

1 LEVEL 2 DETAIL 01
SCALE: 3/4" = 1'-0"

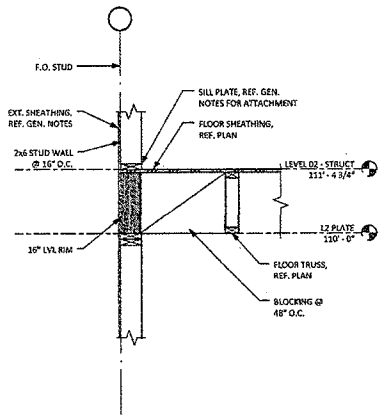

2 LEVEL 2 DETAIL 02
SCALE: 3/4" = 1'-0"

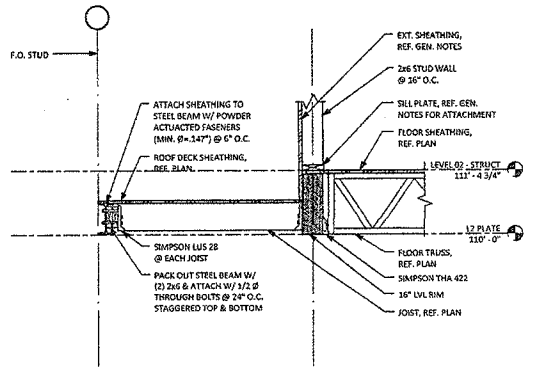

3 LEVEL 2 DETAIL 03
SCALE: 3/4" = 1'-0"

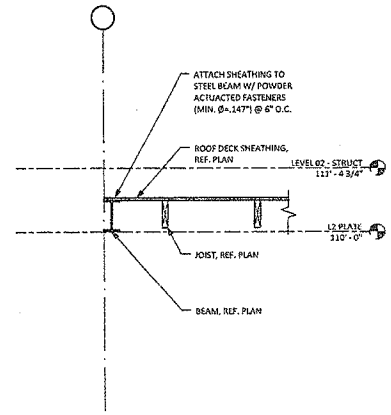

4 LEVEL 2 DETAIL 04
SCALE: 3/4" = 1'-0"

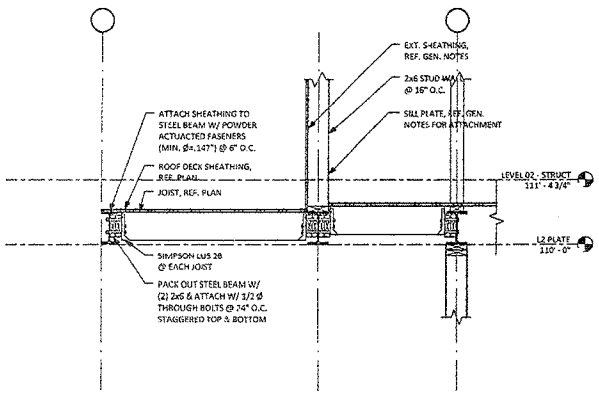

5 LEVEL 2 DETAIL 05
SCALE: 3/4" = 1'-0"

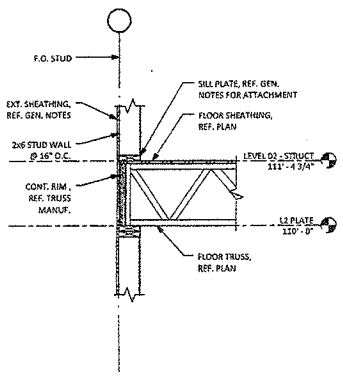

6 LEVEL 2 DETAIL 06
SCALE: 3/4" = 1'-0"

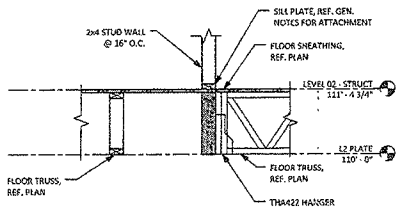

7 LEVEL 2 DETAIL 07
SCALE: 3/4" = 1'-0"

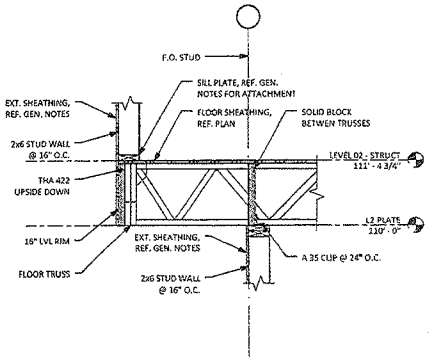

8 LEVEL 2 DETAIL 08
SCALE: 3/4" = 1'-0"

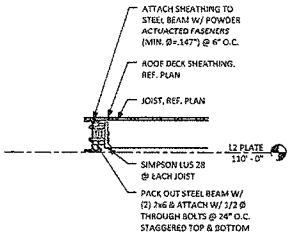

9 LEVEL 2 DETAIL 09
SCALE: 3/4" = 1'-0"

ARBIB HUGHEY DES
2235 EAST 6th ST. 8104 AUSTIN, TX 7

LeapIStructures
3001 S Lamar Blvd. #230
Austin, TX 78704 | (512) 298-3999
Texas Registration # F-2002

TATSUYA KUCHIN
16137

project i

project name:
DAVIDSON RESIDENCE

physical location:
1803 CLIFFORD STREET
AUSTIN, TEXAS 78702

owner:
Amanda & Graham Davidson
1802 Sanchez Street
Austin, TX 78702
512.898.2987

contractor:
TBD

engineer:
LEAPISTRUCTURES
3001 S Lamar Blvd. Suite A-230
Austin, TX 78704
512.298.3999

phase info:

set:
PERMIT SET

date 2014.08.01

revisions	date

copyright

drawing

WOOD FRAMING DETAILS

S620

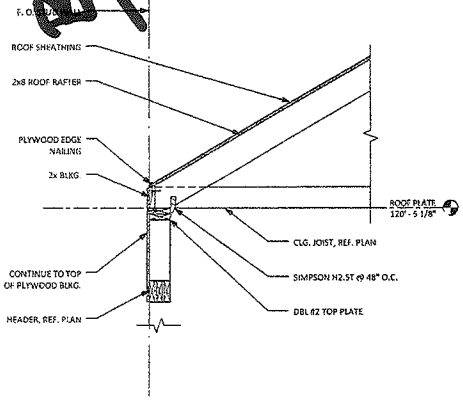

1 ROOF DETAIL 01
SCALE: 3/4" = 1'-0"

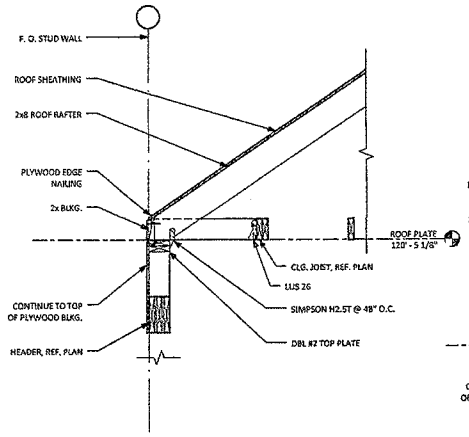

2 ROOF DETAIL 02
SCALE: 3/4" = 1'-0"

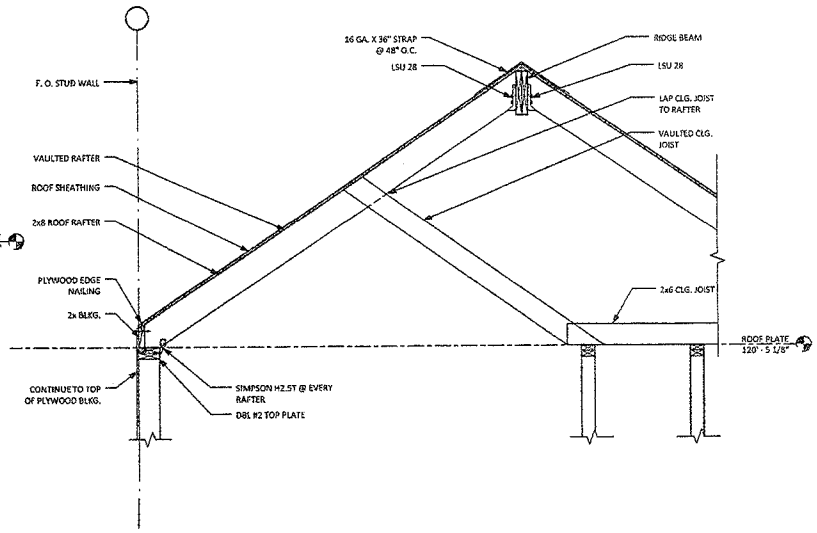

3 ROOF DETAIL 03
SCALE: 3/4" = 1'-0"

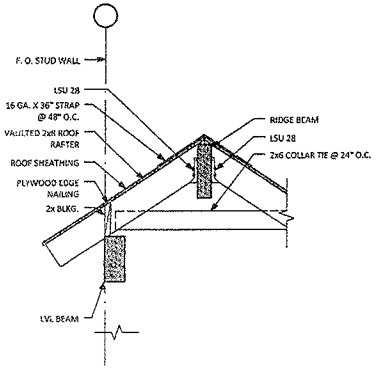

4 ROOF DETAIL 04
SCALE: 3/4" = 1'-0"

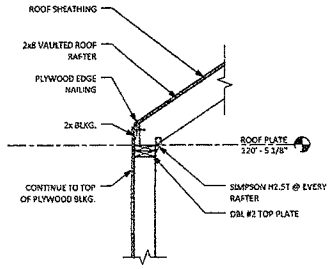

5 ROOF DETAIL 05
SCALE: 3/4" = 1'-0"

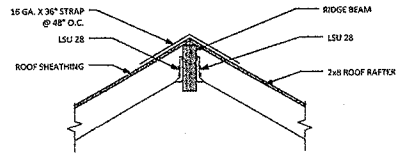

6 ROOF DETAIL 06
SCALE: 3/4" = 1'-0"

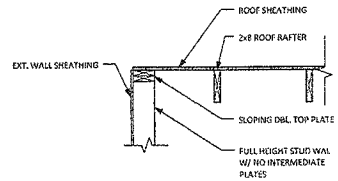

7 ROOF DETAIL 07
SCALE: 3/4" = 1'-0"

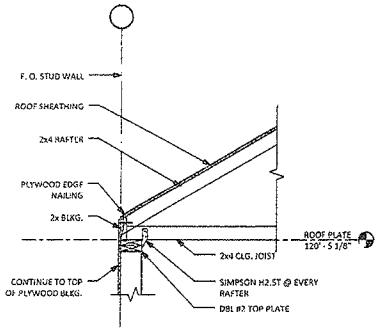

8 ROOF DETAIL 08
SCALE: 3/4" = 1'-0"

ARBIB HUGHEY DESIG
2225 EAST 6th ST #104 AUSTIN, TX 7870

LeapStructures
3001 Lamar Blvd. #230
Austin, TX 78704 512.298.3999

project info

project name:
DAVIDSON RESIDENCE

physical location:
1803 CLIFFORD STREET
AUSTIN, TEXAS 78702

owners:
Amanda & Graham Davidson
1802 Sanchez Street
Austin, TX 78702
512.098.2987

contractor:
TBD

engineer:
LEAPSTRUCTURES
3001 S Lamar Blvd. Suite A-230
Austin, TX 78704
512.298.3999

phase info:

set:
PERMIT SET

date: 2014.08.01

revisions	date

drawing in

WOOD FRAMING DETAIL

S621

* PRINT THIS REPORT AND PRESENT IT AT THE TIME OF UPDATE SUBMITTAL *

B2/40

City of Austin Residential Permit Application

Master Comment Report

Property: 1803 CLIFFORD AVE

Case #: 2014-083741 PR

Case Manager: Shahin Moezzi

Original Submittal Date: August 8, 2014
Application Expiration: February 4, 2015
Comment-report Sent: August 27, 2014
Comment-report #: 1
Manager Contact: Shahin.Moezzi@austintexas.gov

This report includes all staff comments received to date concerning your most recent residential permit application submittal. The comments may include requirements, recommendations, and/or information.

The application will be approved when ALL comments from each review discipline have been addressed. Your application is considered disapproved until the update process occurs. *(Additional comments may be generated as a result of information or design changes provided in your update.)*

Please contact your case manager or appropriate reviewer(s) if you have any questions, concerns, or require additional information about this report **to schedule an appointment** so that your concerns can be addressed. **Please understand that you CANNOT meet with your reviewer(s) during General Information Walk-In Hours** – we **DO NOT** take walk-ins for projects under review; **you must schedule an appointment with your reviewer.**

Requirements:

- Prepare a separate document **OR** use this report to explain how each comment is being addressed. **Include the document with this Master Comment Report upon time of re-submittal.**
- Submit 3 separate sets of updated drawings (assembled and stapled) – correctly sized and to-scale *(according to original intake requirements).*
- Label all additional reviewer-specific paperwork accordingly.
- If information on the application changed from the initial submittal, you must provide a new application with the appropriate revisions.
- If revisions of the site plan are required, the small format set must be re-stamped by Austin Energy and Austin Water Utility – as necessary.

Update Fees and Submittal:

It is required that you submit all documents requested for the update together. Residential Review will **NOT** accept informal updates for any case – NO EXCEPTIONS. If there are remaining comments to be addressed on this comment report, it will be **REJECTED** which will incur a review update fee *($342.00 plus 4% development surcharge)* on all subsequent update submittals. Invoices will use the billing information obtained during Intake. The fee must be paid at the Cashier on the first (1st) floor of the One Texas Center (OTC) before the update will be accepted. Your update must be formally submitted to the Residential Intake desk on the second (2nd) floor of the OTC during Intake hours (MWF 8a – 11p, W 1p – 3p).

Update Deadline (LDC 25-1) and extensions:

It is the responsibility of the applicant or his/her agent to update this application. The final update to clear all comments must be submitted by the application expiration date. Otherwise, the application will automatically expire. If this date falls on a weekend or City of Austin holiday, the next City of Austin workday will be the deadline. Contact your case manager to request an extension. Note that an extension may be granted only one (1) time and must be requested prior to expiration.

Online Reference:

Your project information is available online:
http://www.austintexas.gov/page/interactive-development-review-permitting-and-inspection

Residential Zoning Review - Paul Yadro - 512-974-3553

B2/41

I have reviewed the above noted application and have the following comments that must be addressed before a permit will be released:

1. Contact/visit Michael Watson (walk-in hours M,W, F 8a-11a) to submit a total demolition permit for the shed (~500sf) that was or is still on the property. AMANDA records do not show that a demolition permit was ever pulled for it and GIS and TCAD still shows it on the property. Any structure over 200sf requires a total demolition permit and TCAD will not remove it without seeing the FINAL for the Total Demo BP.
2. On the plans (sheet BP.1) remove the note regarding a porch encroachment per 25-2-1602. You are allowed to encroach up to 5 feet for a ground floor porch into the required front yard per 25-2-513 not 25-2-1602. In addition, the Rosewood NP did not adopt 25-2-1602 – so this design tool per 25-2-1602 is not available for this property. Revise accordingly.
3. Contact/visit (and take a complete plan set with your) Jennifer Back in the Development Assistance Center (her walk-in hours are M-F from 9a to 12p) for consultation regarding cut and fill in excess of 4' and your proposed retaining wall that wraps around the rear and side property lines. Reason: The applicant marked "yes "to the cut/fill question on the PR application and the retaining wall as depicted on the plot plan is not included in its entirety on the Sealed Foundation Plan. It appears that you will need approvals for cut/fill over 4' and a new retaining wall. Note: Residential Review does not review and approve retaining walls and cut and fills over 4' – you start the process with Ms. Back in the DAC.
4. On the full-size plan set – the scale is drawn accurately to stated scale on the Plot Plan – revise and correct this with your next Update.
5. Your front porch and the covered wood deck are all connected and count as one ground floor porch per review and it has second floor area above it. Thus, it must be accounted for in the FAR calculation. Note: Only 200sf of it may be exempted. As it appears this will push you over the maximum 2300sf allowed f or this property. Substantial revisions will be required.
6. Any fence/wall located within the required front yard that is over 6' feet in height requires a Board of Adjustment Variance. As submitted, in elevation view – you wall/fence combination is 6.5 feet in height. Revise accordingly or contact Leane Heldenfels in the DAC for consultation and Board of Adjustment application procedures.
7. All proposed fence/walls must comply with LDC 25-2-899. No information other than what is provided on the building elevations was provided within the plan set regarding the proposed fence/walls – thus staff cannot make a complete review and provide complete comments with regards to the proposed fence/walls. The plot plan does not provide the maximum fence/wall heights, where they occur, and where they change. Provide this information on the plans with your next Update.
8. On the plot plan adjust your Type 1 apron so that it has 5' radii curb returns that do not cross the extended side property line. Note: Your parking area will probably have to shift also.
9. For submittal of next update: submit 3 complete plan sets (2 full-size sets and 1 small-size) drawn to scale and Sealed by your Design Professional.
10. When submitting next Update, make for certain to submit revisions that will address all comments. Do not piecemeal (submitting multiple updates to address rejection comments) your Updates because as of October 1, 2013 new Residential Review Fees have gone into effect for Plan Reviews and Plan Review Updates. As of October 1, 2013, the combined plan review fee covers the initial review and one (1) update. Note: After a Plan Review receives two rejections; a Plan Review Update Fee ($342 + 4% Development Services Surcharge Fee) is automatically generated and must be paid before submitting future Updates. If you have unpaid fees on a Plan Review Application and attempt to submit Updates, our Intake Staff will not accept your Update and revised plans until any unpaid fees are paid.
11. Staff will hold the plans and application as submitted in our office. If you have questions regarding the comments or would like to make an appointment with the Zoning Reviewer, please contact Paul Yadro

September 5, 2014

ADJACENT TO NORTH

B2/42

Dear Neighbor,

My husband Graham, daughter Edie (4) and I live on 1802 Sanchez Street. We also own the vacant lot directly behind us at 1803 Clifford Avenue, where we are planning to begin construction on a new single-family home in October. After submitting our design plans to the city, we have run into a code interpretation issue regarding what does and does not count toward the maximum FAR (gross floor to area ratio) for our lot. On October 1st, we will be presenting our case to the Residential Design & Compatibility Commission (RDCC), who have the power to grant a variance for an increase in FAR for up to 25%.

This letter is to inform you and to ask for your support in our request. We submitted plans for a home that we had calculated to be 2,298 sq ft (max allowed is 2,300). While we feel that a home this size is more than ample for a single family, it would also accommodate our desire for a home-school classroom as well space for our aging parents, all of whom live nearby. The differing interpretation of the code that we are running into relates to an exterior covered breezeway, that we understood to be exempt; but that will now count toward FAR, effectively adding 80 sq ft to the calculation.

Because we will be approaching the RDCC with this request, we would also like to make two more small design changes. We would like to cover a first floor 5' x 10' exterior walkway, which will require a side wall articulation variance on the south side of the building. We would also like to add 12-18 inches of height to the second floor office/guest room, which is currently uncomfortably low (8ft peak; 3ft sides). **Our requested changes will result in a total increase of approx. 12% FAR (around 266 sq ft). Please note that none of the proposed changes will alter the overall scale or massing of the home from its original design. There will be no visible change to the exterior of the home from the street, making it effectively the same project. In fact, we are not "adding" space at all. This increase is purely a matter of how (mostly exterior) spaces are calculated.**

We have worked hard to design a home that we feel fits well into the neighborhood, while adding value and beauty. We feel that the proposed changes will not infringe on you as our neighbors. If you are in support of our request, please sign under the below statement.

Please do not hesitate to contact us with any questions or concerns.

Sincerely,

Amanda and Graham Davidson
1802 Sanchez Street
512-698-2987 (Amanda's cell phone)
512-694-8663 (Graham's cell phone)

"I support Graham and Amanda Davidson's request for a variance for an FAR increase of around 12 % (approximately 266 sq ft) as well as a waiver on the side wall articulation for the 1803 Clifford Avenue project."

PRINTED NAME: Peggy Carothers

HOME ADDRESS: 1805 Clifford Ave.

PHONE: 512-476-8584

SIGNATURE Peggy Carothers

ADJACENT TO SOUTH

B2/43

September 5, 2014

Dear Neighbor,

My husband Graham, daughter Edie (4) and I live on 1802 Sanchez Street. We also own the vacant lot directly behind us at 1803 Clifford Avenue, where we are planning to begin construction on a new single-family home in October. After submitting our design plans to the city, we have run into a code interpretation issue regarding what does and does not count toward the maximum FAR (gross floor to area ratio) for our lot. On October 1st, we will be presenting our case to the Residential Design & Compatibility Commission (RDCC), who have the power to grant a variance for an increase in FAR for up to 25%.

This letter is to inform you and to ask for your support in our request. We submitted plans for a home that we had calculated to be 2,298 sq ft (max allowed is 2,300). While we feel that a home this size is more than ample for a single family, it would also accommodate our desire for a home-school classroom as well space for our aging parents, all of whom live nearby. The differing interpretation of the code that we are running into relates to an exterior covered breezeway, that we understood to be exempt; but that will now count toward FAR, effectively adding 80 sq ft to the calculation.

Because we will be approaching the RDCC with this request, we would also like to make two more small design changes. We would like to cover a first floor 5' x 10' exterior walkway, which will require a side wall articulation variance on the south side of the building. We would also like to add 12-18 inches of height to the second floor office/guest room, which is currently uncomfortably low (8ft peak; 3ft sides). **Our requested changes will result in a total increase of approx. 12% FAR (around 266 sq ft). Please note that none of the proposed changes will alter the overall scale or massing of the home from its original design. There will be no visible change to the exterior of the home from the street, making it effectively the same project. In fact, we are not "adding" space at all. This increase is purely a matter of how (mostly exterior) spaces are calculated.**

We have worked hard to design a home that we feel fits well into the neighborhood, while adding value and beauty. We feel that the proposed changes will not infringe on you as our neighbors. If you are in support of our request, please sign under the below statement.

Please do not hesitate to contact us with any questions or concerns.

Sincerely,

Amanda and Graham Davidson
1802 Sanchez Street
512-698-2987 (Amanda's cell phone)
512-694-8663 (Graham's cell phone)

"I support Graham and Amanda Davidson's request for a variance for an FAR increase of around 12 % (approximately 266 sq ft) as well as a waiver on the side wall articulation for the 1803 Clifford Avenue project."

PRINTED NAME: Jerry T. Springer E-I35 Properties LLC

HOME ADDRESS: 1801 Clifford Ave.

PHONE: 903-918-3700

SIGNATURE

ADJACENT TO EAST (BEHIND)

B2/44

September 5, 2014

Dear Neighbor,

My husband Graham, daughter Edie (4) and I live on 1802 Sanchez Street. We also own the vacant lot directly behind us at 1803 Clifford Avenue, where we are planning to begin construction on a new single-family home in October. After submitting our design plans to the city, we have run into a code interpretation issue regarding what does and does not count toward the maximum FAR (gross floor to area ratio) for our lot. On October 1st, we will be presenting our case to the Residential Design & Compatibility Commission (RDCC), who have the power to grant a variance for an increase in FAR for up to 25%.

This letter is to inform you and to ask for your support in our request. We submitted plans for a home that we had calculated to be 2,298 sq ft (max allowed is 2,300). While we feel that a home this size is more than ample for a single family, it would also accommodate our desire for a home-school classroom as well space for our aging parents, all of whom live nearby. The differing interpretation of the code that we are running into relates to an exterior covered breezeway, that we understood to be exempt; but that will now count toward FAR, effectively adding 80 sq ft to the calculation.

Because we will be approaching the RDCC with this request, we would also like to make two more small design changes. We would like to cover a first floor 5' x 10' exterior walkway, which will require a side wall articulation variance on the south side of the building. We would also like to add 12-18 inches of height to the second floor office/guest room, which is currently uncomfortably low (8ft peak; 3ft sides). **Our requested changes will result in a total increase of approx. 12% FAR (around 266 sq ft). Please note that none of the proposed changes will alter the overall scale or massing of the home from its original design. There will be no visible change to the exterior of the home from the street, making it effectively the same project. In fact, we are not "adding" space at all. This increase is purely a matter of how (mostly exterior) spaces are calculated.**

We have worked hard to design a home that we feel fits well into the neighborhood, while adding value and beauty. We feel that the proposed changes will not infringe on you as our neighbors. If you are in support of our request, please sign under the below statement.

Please do not hesitate to contact us with any questions or concerns.

Sincerely,

Amanda and Graham Davidson
1802 Sanchez Street
512-698-2987 (Amanda's cell phone)
512-694-8663 (Graham's cell phone)

"I support Graham and Amanda Davidson's request for a variance for an FAR increase of around 12 % (approximately 266 sq ft) as well as a waiver on the side wall articulation for the 1803 Clifford Avenue project."

PRINTED NAME: AUSTIN DAVIDSON

HOME ADDRESS: 1802 SANCHEZ ST. AUSTIN, TX 78702

PHONE: 512-694-8663

SIGNATURE

B2/45

September 5, 2014

Dear Neighbor,

My husband Graham, daughter Edie (4) and I live on 1802 Sanchez Street. We also own the vacant lot directly behind us at 1803 Clifford Avenue, where we are planning to begin construction on a new single-family home in October. After submitting our design plans to the city, we have run into a code interpretation issue regarding what does and does not count toward the maximum FAR (gross floor to area ratio) for our lot. On October 1st, we will be presenting our case to the Residential Design & Compatibility Commission (RDCC), who have the power to grant a variance for an increase in FAR for up to 25%.

This letter is to inform you and to ask for your support in our request. We submitted plans for a home that we had calculated to be 2,298 sq ft (max allowed is 2,300). While we feel that a home this size is more than ample for a single family, it would also accommodate our desire for a home-school classroom as well space for our aging parents, all of whom live nearby. The differing interpretation of the code that we are running into relates to an exterior covered breezeway, that we understood to be exempt; but that will now count toward FAR, effectively adding 80 sq ft to the calculation.

Because we will be approaching the RDCC with this request, we would also like to make two more small design changes. We would like to cover a first floor 5' x 10' exterior walkway, which will require a side wall articulation variance on the south side of the building. We would also like to add 12-18 inches of height to the second floor office/guest room, which is currently uncomfortably low (8ft peak; 3ft sides). **Our requested changes will result in a total increase of approx. 12% FAR (around 266 sq ft). Please note that none of the proposed changes will alter the overall scale or massing of the home from its original design. There will be no visible change to the exterior of the home from the street, making it effectively the same project. In fact, we are not "adding" space at all. This increase is purely a matter of how (mostly exterior) spaces are calculated.**

We have worked hard to design a home that we feel fits well into the neighborhood, while adding value and beauty. We feel that the proposed changes will not infringe on you as our neighbors. If you are in support of our request, please sign under the below statement.

Please do not hesitate to contact us with any questions or concerns.

Sincerely,

Amanda and Graham Davidson
1802 Sanchez Street
512-698-2987 (Amanda's cell phone)
512-694-8663 (Graham's cell phone)

"I support Graham and Amanda Davidson's request for a variance for an FAR increase of around 12 % (approximately 266 sq ft) as well as a waiver on the side wall articulation for the 1803 Clifford Avenue project." THIS IS AN EXCELLENT PROJECT AND SHOULD BE APPROVED AS REQUESTED!

PRINTED NAME: [illegible] SALAZAR JR

HOME ADDRESS: 1111 CLIFFORD AVE, AUSTIN, TX 78702

PHONE: 512 [illegible] 3691

SIGNATURE [illegible]

BZ
46

September 5, 2014

Dear Neighbor,

My husband Graham, daughter Edie (4) and I live on 1802 Sanchez Street. We also own the vacant lot directly behind us at 1803 Clifford Avenue, where we are planning to begin construction on a new single-family home in October. After submitting our design plans to the city, we have run into a code interpretation issue regarding what does and does not count toward the maximum FAR (gross floor to area ratio) for our lot. On October 1st, we will be presenting our case to the Residential Design & Compatibility Commission (RDCC), who have the power to grant a variance for an increase in FAR for up to 25%.

This letter is to inform you and to ask for your support in our request. We submitted plans for a home that we had calculated to be 2,298 sq ft (max allowed is 2,300). While we feel that a home this size is more than ample for a single family, it would also accommodate our desire for a home-school classroom as well space for our aging parents, all of whom live nearby. The differing interpretation of the code that we are running into relates to an exterior covered breezeway, that we understood to be exempt; but that will now count toward FAR, effectively adding 80 sq ft to the calculation.

Because we will be approaching the RDCC with this request, we would also like to make two more small design changes. We would like to cover a first floor 5' x 10' exterior walkway, which will require a side wall articulation variance on the south side of the building. We would also like to add 12-18 inches of height to the second floor office/guest room, which is currently uncomfortably low (8ft peak; 3ft sides). **Our requested changes will result in a total increase of approx. 12% FAR (around 266 sq ft). Please note that none of the proposed changes will alter the overall scale or massing of the home from its original design. There will be no visible change to the exterior of the home from the street, making it effectively the same project. In fact, we are not "adding" space at all. This increase is purely a matter of how (mostly exterior) spaces are calculated.**

We have worked hard to design a home that we feel fits well into the neighborhood, while adding value and beauty. We feel that the proposed changes will not infringe on you as our neighbors. If you are in support of our request, please sign under the below statement.

Please do not hesitate to contact us with any questions or concerns.

Sincerely,

Amanda and Graham Davidson
1802 Sanchez Street
512-698-2987 (Amanda's cell phone)
512-694-8663 (Graham's cell phone)

"I support Graham and Amanda Davidson's request for a variance for an FAR increase of around 12 % (approximately 266 sq ft) as well as a waiver on the side wall articulation for the 1803 Clifford Avenue project."

PRINTED NAME: Nicolai McCrary

HOME ADDRESS: 1802 Clifford Ave

PHONE: 512-937-5692

SIGNATURE

September 5, 2014

B2/47

Dear Neighbor,

My husband Graham, daughter Edie (4) and I live on 1802 Sanchez Street. We also own the vacant lot directly behind us at 1803 Clifford Avenue, where we are planning to begin construction on a new single-family home in October. After submitting our design plans to the city, we have run into a code interpretation issue regarding what does and does not count toward the maximum FAR (gross floor to area ratio) for our lot. On October 1st, we will be presenting our case to the Residential Design & Compatibility Commission (RDCC), who have the power to grant a variance for an increase in FAR for up to 25%.

This letter is to inform you and to ask for your support in our request. We submitted plans for a home that we had calculated to be 2,298 sq ft (max allowed is 2,300). While we feel that a home this size is more than ample for a single family, it would also accommodate our desire for a home-school classroom as well space for our aging parents, all of whom live nearby. The differing interpretation of the code that we are running into relates to an exterior covered breezeway, that we understood to be exempt; but that will now count toward FAR, effectively adding 80 sq ft to the calculation.

Because we will be approaching the RDCC with this request, we would also like to make two more small design changes. We would like to cover a first floor 5' x 10' exterior walkway, which will require a side wall articulation variance on the south side of the building. We would also like to add 12-18 inches of height to the second floor office/guest room, which is currently uncomfortably low (8ft peak; 3ft sides). **Our requested changes will result in a total increase of approx. 12% FAR (around 266 sq ft). Please note that <u>none of the proposed changes will alter the overall scale or massing of the home from its original design. There will be no visible change to the exterior of the home from the street, making it effectively the same project.</u> In fact, we are not "adding" space at all. This increase is purely a matter of how (mostly exterior) spaces are calculated.**

We have worked hard to design a home that we feel fits well into the neighborhood, while adding value and beauty. We feel that the proposed changes will not infringe on you as our neighbors. If you are in support of our request, please sign under the below statement.

Please do not hesitate to contact us with any questions or concerns.

Sincerely,

Amanda and Graham Davidson
1802 Sanchez Street
512-698-2987 (Amanda's cell phone)
512-694-8663 (Graham's cell phone)

"I support Graham and Amanda Davidson's request for a variance for an FAR increase of around 12 % (approximately 266 sq ft) as well as a waiver on the side wall articulation for the 1803 Clifford Avenue project."

PRINTED NAME: JOAN BLAINEY

HOME ADDRESS: 1800 CLIFFORD AVE

PHONE: 520. 444. 8096

SIGNATURE

BZ 48

September 5, 2014

Dear Neighbor,

My husband Graham, daughter Edie (4) and I live on 1802 Sanchez Street. We also own the vacant lot directly behind us at 1803 Clifford Avenue, where we are planning to begin construction on a new single-family home in October. After submitting our design plans to the city, we have run into a code interpretation issue regarding what does and does not count toward the maximum FAR (gross floor to area ratio) for our lot. On October 1st, we will be presenting our case to the Residential Design & Compatibility Commission (RDCC), who have the power to grant a variance for an increase in FAR for up to 25%.

This letter is to inform you and to ask for your support in our request. We submitted plans for a home that we had calculated to be 2,298 sq ft (max allowed is 2,300). While we feel that a home this size is more than ample for a single family, it would also accommodate our desire for a home-school classroom as well space for our aging parents, all of whom live nearby. The differing interpretation of the code that we are running into relates to an exterior covered breezeway, that we understood to be exempt; but that will now count toward FAR, effectively adding 80 sq ft to the calculation.

Because we will be approaching the RDCC with this request, we would also like to make two more small design changes. We would like to cover a first floor 5' x 10' exterior walkway, which will require a side wall articulation variance on the south side of the building. We would also like to add 12-18 inches of height to the second floor office/guest room, which is currently uncomfortably low (8ft peak; 3ft sides). **Our requested changes will result in a total increase of approx. 12% FAR (around 266 sq ft). Please note that none of the proposed changes will alter the overall scale or massing of the home from its original design. There will be no visible change to the exterior of the home from the street, making it effectively the same project. In fact, we are not "adding" space at all. This increase is purely a matter of how (mostly exterior) spaces are calculated.**

We have worked hard to design a home that we feel fits well into the neighborhood, while adding value and beauty. We feel that the proposed changes will not infringe on you as our neighbors. If you are in support of our request, please sign under the below statement.

Please do not hesitate to contact us with any questions or concerns.

Sincerely,

Amanda and Graham Davidson
1802 Sanchez Street
512-698-2987 (Amanda's cell phone)
512-694-8663 (Graham's cell phone)

"I support Graham and Amanda Davidson's request for a variance for an FAR increase of around 12 % (approximately 266 sq ft) as well as a waiver on the side wall articulation for the 1803 Clifford Avenue project."

PRINTED NAME: Misty White

HOME ADDRESS: 1705 Clifford Ave

PHONE: 512-864-5650

SIGNATURE: Misty White

32/49

September 5, 2014

Dear Neighbor,

My husband Graham, daughter Edie (4) and I live on 1802 Sanchez Street. We also own the vacant lot directly behind us at 1803 Clifford Avenue, where we are planning to begin construction on a new single-family home in October. After submitting our design plans to the city, we have run into a code interpretation issue regarding what does and does not count toward the maximum FAR (gross floor to area ratio) for our lot. On October 1st, we will be presenting our case to the Residential Design & Compatibility Commission (RDCC), who have the power to grant a variance for an increase in FAR for up to 25%.

This letter is to inform you and to ask for your support in our request. We submitted plans for a home that we had calculated to be 2,298 sq ft (max allowed is 2,300). While we feel that a home this size is more than ample for a single family, it would also accommodate our desire for a home-school classroom as well space for our aging parents, all of whom live nearby. The differing interpretation of the code that we are running into relates to an exterior covered breezeway, that we understood to be exempt; but that will now count toward FAR, effectively adding 80 sq ft to the calculation.

Because we will be approaching the RDCC with this request, we would also like to make two more small design changes. We would like to cover a first floor 5' x 10' exterior walkway, which will require a side wall articulation variance on the south side of the building. We would also like to add 12-18 inches of height to the second floor office/guest room, which is currently uncomfortably low (8ft peak; 3ft sides). **Our requested changes will result in a total increase of approx. 12% FAR (around 266 sq ft). Please note that none of the proposed changes will alter the overall scale or massing of the home from its original design. There will be no visible change to the exterior of the home from the street, making it effectively the same project. In fact, we are not "adding" space at all. This increase is purely a matter of how (mostly exterior) spaces are calculated.**

We have worked hard to design a home that we feel fits well into the neighborhood, while adding value and beauty. We feel that the proposed changes will not infringe on you as our neighbors. If you are in support of our request, please sign under the below statement.

Please do not hesitate to contact us with any questions or concerns.

Sincerely,

Amanda and Graham Davidson
1802 Sanchez Street
512-698-2987 (Amanda's cell phone)
512-694-8663 (Graham's cell phone)

"I support Graham and Amanda Davidson's request for a variance for an FAR increase of around 12 % (approximately 266 sq ft) as well as a waiver on the side wall articulation for the 1803 Clifford Avenue project."

PRINTED NAME: Michelle Carbajal

HOME ADDRESS: 1809 Clifford Ave ATX 78702

PHONE: 210-723-3072

SIGNATURE Michelle Carbajal

B2/50

September 5, 2014

Dear Neighbor,

My husband Graham, daughter Edie (4) and I live on 1802 Sanchez Street. We also own the vacant lot directly behind us at 1803 Clifford Avenue, where we are planning to begin construction on a new single-family home in October. After submitting our design plans to the city, we have run into a code interpretation issue regarding what does and does not count toward the maximum FAR (gross floor to area ratio) for our lot. On October 1st, we will be presenting our case to the Residential Design & Compatibility Commission (RDCC), who have the power to grant a variance for an increase in FAR for up to 25%.

This letter is to inform you and to ask for your support in our request. We submitted plans for a home that we had calculated to be 2,298 sq ft (max allowed is 2,300). While we feel that a home this size is more than ample for a single family, it would also accommodate our desire for a home-school classroom as well space for our aging parents, all of whom live nearby. The differing interpretation of the code that we are running into relates to an exterior covered breezeway, that we understood to be exempt; but that will now count toward FAR, effectively adding 80 sq ft to the calculation.

Because we will be approaching the RDCC with this request, we would also like to make two more small design changes. We would like to cover a first floor 5' x 10' exterior walkway, which will require a side wall articulation variance on the south side of the building. We would also like to add 12-18 inches of height to the second floor office/guest room, which is currently uncomfortably low (8ft peak; 3ft sides). **Our requested changes will result in a total increase of approx. 12% FAR (around 266 sq ft). Please note that none of the proposed changes will alter the overall scale or massing of the home from its original design. There will be no visible change to the exterior of the home from the street, making it effectively the same project. In fact, we are not "adding" space at all. This increase is purely a matter of how (mostly exterior) spaces are calculated.**

We have worked hard to design a home that we feel fits well into the neighborhood, while adding value and beauty. We feel that the proposed changes will not infringe on you as our neighbors. If you are in support of our request, please sign under the below statement.

Please do not hesitate to contact us with any questions or concerns.

Sincerely,

Amanda and Graham Davidson
1802 Sanchez Street
512-698-2987 (Amanda's cell phone)
512-694-8663 (Graham's cell phone)

"I support Graham and Amanda Davidson's request for a variance for an FAR increase of around 12 % (approximately 266 sq ft) as well as a waiver on the side wall articulation for the 1803 Clifford Avenue project."

PRINTED NAME: Darryl Washington

HOME ADDRESS: 2920 E. 16th Street

PHONE: 6116-8832

SIGNATURE Darryl Washington

September 5, 2014

B2/51

Dear Neighbor,

My husband Graham, daughter Edie (4) and I live on 1802 Sanchez Street. We also own the vacant lot directly behind us at 1803 Clifford Avenue, where we are planning to begin construction on a new single-family home in October. After submitting our design plans to the city, we have run into a code interpretation issue regarding what does and does not count toward the maximum FAR (gross floor to area ratio) for our lot. On October 1st, we will be presenting our case to the Residential Design & Compatibility Commission (RDCC), who have the power to grant a variance for an increase in FAR for up to 25%.

This letter is to inform you and to ask for your support in our request. We submitted plans for a home that we had calculated to be 2,298 sq ft (max allowed is 2,300). While we feel that a home this size is more than ample for a single family, it would also accommodate our desire for a home-school classroom as well space for our aging parents, all of whom live nearby. The differing interpretation of the code that we are running into relates to an exterior covered breezeway, that we understood to be exempt; but that will now count toward FAR, effectively adding 80 sq ft to the calculation.

Because we will be approaching the RDCC with this request, we would also like to make two more small design changes. We would like to cover a first floor 5' x 10' exterior walkway, which will require a side wall articulation variance on the south side of the building. We would also like to add 12-18 inches of height to the second floor office/guest room, which is currently uncomfortably low (8ft peak; 3ft sides). **Our requested changes will result in a total increase of approx. 12% FAR (around 266 sq ft). Please note that none of the proposed changes will alter the overall scale or massing of the home from its original design. There will be no visible change to the exterior of the home from the street, making it effectively the same project. In fact, we are not "adding" space at all. This increase is purely a matter of how (mostly exterior) spaces are calculated.**

We have worked hard to design a home that we feel fits well into the neighborhood, while adding value and beauty. We feel that the proposed changes will not infringe on you as our neighbors. If you are in support of our request, please sign under the below statement.

Please do not hesitate to contact us with any questions or concerns.

Sincerely,

Amanda and Graham Davidson
1802 Sanchez Street
512-698-2987 (Amanda's cell phone)
512-694-8663 (Graham's cell phone)

"I support Graham and Amanda Davidson's request for a variance for an FAR increase of around 12 % (approximately 266 sq ft) as well as a waiver on the side wall articulation for the 1803 Clifford Avenue project."

PRINTED NAME: John Gonzales

HOME ADDRESS: 1703 Clifford Ave

PHONE: 512 940.4588

SIGNATURE

September 5, 2014

B 2/52

Dear Neighbor,

My husband Graham, daughter Edie (4) and I live on 1802 Sanchez Street. We also own the vacant lot directly behind us at 1803 Clifford Avenue, where we are planning to begin construction on a new single-family home in October. After submitting our design plans to the city, we have run into a code interpretation issue regarding what does and does not count toward the maximum FAR (gross floor to area ratio) for our lot. On October 1st, we will be presenting our case to the Residential Design & Compatibility Commission (RDCC), who have the power to grant a variance for an increase in FAR for up to 25%.

This letter is to inform you and to ask for your support in our request. We submitted plans for a home that we had calculated to be 2,298 sq ft (max allowed is 2,300). While we feel that a home this size is more than ample for a single family, it would also accommodate our desire for a home-school classroom as well space for our aging parents, all of whom live nearby. The differing interpretation of the code that we are running into relates to an exterior covered breezeway, that we understood to be exempt; but that will now count toward FAR, effectively adding 80 sq ft to the calculation.

Because we will be approaching the RDCC with this request, we would also like to make two more small design changes. We would like to cover a first floor 5' x 10' exterior walkway, which will require a side wall articulation variance on the south side of the building. We would also like to add 12-18 inches of height to the second floor office/guest room, which is currently uncomfortably low (8ft peak; 3ft sides). **Our requested changes will result in a total increase of approx. 12% FAR (around 266 sq ft). Please note that none of the proposed changes will alter the overall scale or massing of the home from its original design. There will be no visible change to the exterior of the home from the street, making it effectively the same project. In fact, we are not "adding" space at all. This increase is purely a matter of how (mostly exterior) spaces are calculated.**

We have worked hard to design a home that we feel fits well into the neighborhood, while adding value and beauty. We feel that the proposed changes will not infringe on you as our neighbors. If you are in support of our request, please sign under the below statement.

Please do not hesitate to contact us with any questions or concerns.

Sincerely,

Amanda and Graham Davidson
1802 Sanchez Street
512-698-2987 (Amanda's cell phone)
512-694-8663 (Graham's cell phone)

"I support Graham and Amanda Davidson's request for a variance for an FAR increase of around 12 % (approximately 266 sq ft) as well as a waiver on the side wall articulation for the 1803 Clifford Avenue project."

PRINTED NAME: Dan Street

HOME ADDRESS: 1813 Clifford Ave

PHONE: 214-822-9764

SIGNATURE

September 5, 2014

B2/53

Dear Neighbor,

My husband Graham, daughter Edie (4) and I live on 1802 Sanchez Street. We also own the vacant lot directly behind us at 1803 Clifford Avenue, where we are planning to begin construction on a new single-family home in October. After submitting our design plans to the city, we have run into a code interpretation issue regarding what does and does not count toward the maximum FAR (gross floor to area ratio) for our lot. On October 1st, we will be presenting our case to the Residential Design & Compatibility Commission (RDCC), who have the power to grant a variance for an increase in FAR for up to 25%.

This letter is to inform you and to ask for your support in our request. We submitted plans for a home that we had calculated to be 2,298 sq ft (max allowed is 2,300). While we feel that a home this size is more than ample for a single family, it would also accommodate our desire for a home-school classroom as well space for our aging parents, all of whom live nearby. The differing interpretation of the code that we are running into relates to an exterior covered breezeway, that we understood to be exempt; but that will now count toward FAR, effectively adding 80 sq ft to the calculation.

Because we will be approaching the RDCC with this request, we would also like to make two more small design changes. We would like to cover a first floor 5' x 10' exterior walkway, which will require a side wall articulation variance on the south side of the building. We would also like to add 12-18 inches of height to the second floor office/guest room, which is currently uncomfortably low (8ft peak; 3ft sides). **Our requested changes will result in a total increase of approx. 12% FAR (around 266 sq ft). Please note that none of the proposed changes will alter the overall scale or massing of the home from its original design. There will be no visible change to the exterior of the home from the street, making it effectively the same project. In fact, we are not "adding" space at all. This increase is purely a matter of how (mostly exterior) spaces are calculated.**

We have worked hard to design a home that we feel fits well into the neighborhood, while adding value and beauty. We feel that the proposed changes will not infringe on you as our neighbors. If you are in support of our request, please sign under the below statement.

Please do not hesitate to contact us with any questions or concerns.

Sincerely,

Amanda and Graham Davidson
1802 Sanchez Street
512-698-2987 (Amanda's cell phone)
512-694-8663 (Graham's cell phone)

"I support Graham and Amanda Davidson's request for a variance for an FAR increase of around 12 % (approximately 266 sq ft) as well as a waiver on the side wall articulation for the 1803 Clifford Avenue project."

PRINTED NAME: Jeremy Newlin

HOME ADDRESS: 1811 Clifford Ave

PHONE: 515 556 1872

SIGNATURE

September 5, 2014

B2/54

Dear Neighbor,

My husband Graham, daughter Edie (4) and I live on 1802 Sanchez Street. We also own the vacant lot directly behind us at 1803 Clifford Avenue, where we are planning to begin construction on a new single-family home in October. After submitting our design plans to the city, we have run into a code interpretation issue regarding what does and does not count toward the maximum FAR (gross floor to area ratio) for our lot. On October 1st, we will be presenting our case to the Residential Design & Compatibility Commission (RDCC), who have the power to grant a variance for an increase in FAR for up to 25%.

This letter is to inform you and to ask for your support in our request. We submitted plans for a home that we had calculated to be 2,298 sq ft (max allowed is 2,300). While we feel that a home this size is more than ample for a single family, it would also accommodate our desire for a home-school classroom as well space for our aging parents, all of whom live nearby. The differing interpretation of the code that we are running into relates to an exterior covered breezeway, that we understood to be exempt; but that will now count toward FAR, effectively adding 80 sq ft to the calculation.

Because we will be approaching the RDCC with this request, we would also like to make two more small design changes. We would like to cover a first floor 5' x 10' exterior walkway, which will require a side wall articulation variance on the south side of the building. We would also like to add 12-18 inches of height to the second floor office/guest room, which is currently uncomfortably low (8ft peak; 3ft sides). **Our requested changes will result in a total increase of approx. 12% FAR (around 266 sq ft). Please note that none of the proposed changes will alter the overall scale or massing of the home from its original design. There will be no visible change to the exterior of the home from the street, making it effectively the same project. In fact, we are not "adding" space at all. This increase is purely a matter of how (mostly exterior) spaces are calculated.**

We have worked hard to design a home that we feel fits well into the neighborhood, while adding value and beauty. We feel that the proposed changes will not infringe on you as our neighbors. If you are in support of our request, please sign under the below statement.

Please do not hesitate to contact us with any questions or concerns.

Sincerely,

Amanda and Graham Davidson
1802 Sanchez Street
512-698-2987 (Amanda's cell phone)
512-694-8663 (Graham's cell phone)

"I support Graham and Amanda Davidson's request for a variance for an FAR increase of around 12 % (approximately 266 sq ft) as well as a waiver on the side wall articulation for the 1803 Clifford Avenue project."

PRINTED NAME: Taylor + Diana Rudd

HOME ADDRESS: 1405 Sanchez St. Austin, TX 78702

PHONE: 254. 640. 0030.

SIGNATURE

September 5, 2014

B2/55

Dear Neighbor,

My husband Graham, daughter Edie (4) and I live on 1802 Sanchez Street. We also own the vacant lot directly behind us at 1803 Clifford Avenue, where we are planning to begin construction on a new single-family home in October. After submitting our design plans to the city, we have run into a code interpretation issue regarding what does and does not count toward the maximum FAR (gross floor to area ratio) for our lot. On October 1st, we will be presenting our case to the Residential Design & Compatibility Commission (RDCC), who have the power to grant a variance for an increase in FAR for up to 25%.

This letter is to inform you and to ask for your support in our request. We submitted plans for a home that we had calculated to be 2,298 sq ft (max allowed is 2,300). While we feel that a home this size is more than ample for a single family, it would also accommodate our desire for a home-school classroom as well space for our aging parents, all of whom live nearby. The differing interpretation of the code that we are running into relates to an exterior covered breezeway, that we understood to be exempt; but that will now count toward FAR, effectively adding 80 sq ft to the calculation.

Because we will be approaching the RDCC with this request, we would also like to make two more small design changes. We would like to cover a first floor 5' x 10' exterior walkway, which will require a side wall articulation variance on the south side of the building. We would also like to add 12-18 inches of height to the second floor office/guest room, which is currently uncomfortably low (8ft peak; 3ft sides). **Our requested changes will result in a total increase of approx. 12% FAR (around 266 sq ft). Please note that <u>none of the proposed changes will alter the overall scale or massing of the home from its original design. There will be no visible change to the exterior of the home from the street, making it effectively the same project.</u> In fact, we are not "adding" space at all. This increase is purely a matter of how (mostly exterior) spaces are calculated.**

We have worked hard to design a home that we feel fits well into the neighborhood, while adding value and beauty. We feel that the proposed changes will not infringe on you as our neighbors. If you are in support of our request, please sign under the below statement.

Please do not hesitate to contact us with any questions or concerns.

Sincerely,

Amanda and Graham Davidson
1802 Sanchez Street
512-698-2987 (Amanda's cell phone)
512-694-8663 (Graham's cell phone)

"I support Graham and Amanda Davidson's request for a variance for an FAR increase of around 12 % (approximately 266 sq ft) as well as a waiver on the side wall articulation for the 1803 Clifford Avenue project."

PRINTED NAME: Erin Boyd

HOME ADDRESS: 1707C Sanchez St. Austin TX 78702

PHONE: 410 507 5210

SIGNATURE Erin Boyd

September 5, 2014

B2/59

Dear Neighbor,

My husband Graham, daughter Edie (4) and I live on 1802 Sanchez Street. We also own the vacant lot directly behind us at 1803 Clifford Avenue, where we are planning to begin construction on a new single-family home in October. After submitting our design plans to the city, we have run into a code interpretation issue regarding what does and does not count toward the maximum FAR (gross floor to area ratio) for our lot. On October 1st, we will be presenting our case to the Residential Design & Compatibility Commission (RDCC), who have the power to grant a variance for an increase in FAR for up to 25%.

This letter is to inform you and to ask for your support in our request. We submitted plans for a home that we had calculated to be 2,298 sq ft (max allowed is 2,300). While we feel that a home this size is more than ample for a single family, it would also accommodate our desire for a home-school classroom as well space for our aging parents, all of whom live nearby. The differing interpretation of the code that we are running into relates to an exterior covered breezeway, that we understood to be exempt; but that will now count toward FAR, effectively adding 80 sq ft to the calculation.

Because we will be approaching the RDCC with this request, we would also like to make two more small design changes. We would like to cover a first floor 5' x 10' exterior walkway, which will require a side wall articulation variance on the south side of the building. We would also like to add 12-18 inches of height to the second floor office/guest room, which is currently uncomfortably low (8ft peak; 3ft sides). **Our requested changes will result in a total increase of approx. 12% FAR (around 266 sq ft). Please note that none of the proposed changes will alter the overall scale or massing of the home from its original design. There will be no visible change to the exterior of the home from the street, making it effectively the same project. In fact, we are not "adding" space at all. This increase is purely a matter of how (mostly exterior) spaces are calculated.**

We have worked hard to design a home that we feel fits well into the neighborhood, while adding value and beauty. We feel that the proposed changes will not infringe on you as our neighbors. If you are in support of our request, please sign under the below statement.

Please do not hesitate to contact us with any questions or concerns.

Sincerely,

Amanda and Graham Davidson
1802 Sanchez Street
512-698-2987 (Amanda's cell phone)
512-694-8663 (Graham's cell phone)

"I support Graham and Amanda Davidson's request for a variance for an FAR increase of around 12 % (approximately 266 sq ft) as well as a waiver on the side wall articulation for the 1803 Clifford Avenue project."

PRINTED NAME: Marie McKee

HOME ADDRESS: 1707 Sanchez #E, Austin 78702

PHONE: 512-751-3255

SIGNATURE Marie McKee

September 5, 2014

B2/5

Dear Neighbor,

My husband Graham, daughter Edie (4) and I live on 1802 Sanchez Street. We also own the vacant lot directly behind us at 1803 Clifford Avenue, where we are planning to begin construction on a new single-family home in October. After submitting our design plans to the city, we have run into a code interpretation issue regarding what does and does not count toward the maximum FAR (gross floor to area ratio) for our lot. On October 1st, we will be presenting our case to the Residential Design & Compatibility Commission (RDCC), who have the power to grant a variance for an increase in FAR for up to 25%.

This letter is to inform you and to ask for your support in our request. We submitted plans for a home that we had calculated to be 2,298 sq ft (max allowed is 2,300). While we feel that a home this size is more than ample for a single family, it would also accommodate our desire for a home-school classroom as well space for our aging parents, all of whom live nearby. The differing interpretation of the code that we are running into relates to an exterior covered breezeway, that we understood to be exempt; but that will now count toward FAR, effectively adding 80 sq ft to the calculation.

Because we will be approaching the RDCC with this request, we would also like to make two more small design changes. We would like to cover a first floor 5' x 10' exterior walkway, which will require a side wall articulation variance on the south side of the building. We would also like to add 12-18 inches of height to the second floor office/guest room, which is currently uncomfortably low (8ft peak; 3ft sides). **Our requested changes will result in a total increase of approx. 12% FAR (around 266 sq ft). Please note that none of the proposed changes will alter the overall scale or massing of the home from its original design. There will be no visible change to the exterior of the home from the street, making it effectively the same project. In fact, we are not "adding" space at all. This increase is purely a matter of how (mostly exterior) spaces are calculated.**

We have worked hard to design a home that we feel fits well into the neighborhood, while adding value and beauty. We feel that the proposed changes will not infringe on you as our neighbors. If you are in support of our request, please sign under the below statement.

Please do not hesitate to contact us with any questions or concerns.

Sincerely,

Amanda and Graham Davidson
1802 Sanchez Street
512-698-2987 (Amanda's cell phone)
512-694-8663 (Graham's cell phone)

"I support Graham and Amanda Davidson's request for a variance for an FAR increase of around 12 % (approximately 266 sq ft) as well as a waiver on the side wall articulation for the 1803 Clifford Avenue project."

PRINTED NAME: Jennifer Love

HOME ADDRESS: 1606 Sanchez, Austin, TX

PHONE: 361.215.5815

SIGNATURE

September 5, 2014

B2/58

Dear Neighbor,

My husband Graham, daughter Edie (4) and I live on 1802 Sanchez Street. We also own the vacant lot directly behind us at 1803 Clifford Avenue, where we are planning to begin construction on a new single-family home in October. After submitting our design plans to the city, we have run into a code interpretation issue regarding what does and does not count toward the maximum FAR (gross floor to area ratio) for our lot. On October 1st, we will be presenting our case to the Residential Design & Compatibility Commission (RDCC), who have the power to grant a variance for an increase in FAR for up to 25%.

This letter is to inform you and to ask for your support in our request. We submitted plans for a home that we had calculated to be 2,298 sq ft (max allowed is 2,300). While we feel that a home this size is more than ample for a single family, it would also accommodate our desire for a home-school classroom as well space for our aging parents, all of whom live nearby. The differing interpretation of the code that we are running into relates to an exterior covered breezeway, that we understood to be exempt; but that will now count toward FAR, effectively adding 80 sq ft to the calculation.

Because we will be approaching the RDCC with this request, we would also like to make two more small design changes. We would like to cover a first floor 5' x 10' exterior walkway, which will require a side wall articulation variance on the south side of the building. We would also like to add 12-18 inches of height to the second floor office/guest room, which is currently uncomfortably low (8ft peak; 3ft sides). **Our requested changes will result in a total increase of approx. 12% FAR (around 266 sq ft). Please note that none of the proposed changes will alter the overall scale or massing of the home from its original design. There will be no visible change to the exterior of the home from the street, making it effectively the same project. In fact, we are not "adding" space at all. This increase is purely a matter of how (mostly exterior) spaces are calculated.**

We have worked hard to design a home that we feel fits well into the neighborhood, while adding value and beauty. We feel that the proposed changes will not infringe on you as our neighbors. If you are in support of our request, please sign under the below statement.

Please do not hesitate to contact us with any questions or concerns.

Sincerely,

Amanda and Graham Davidson
1802 Sanchez Street
512-698-2987 (Amanda's cell phone)
512-694-8663 (Graham's cell phone)

"I support Graham and Amanda Davidson's request for a variance for an FAR increase of around 12 % (approximately 266 sq ft) as well as a waiver on the side wall articulation for the 1803 Clifford Avenue project."

PRINTED NAME: John Hofstetter

HOME ADDRESS: 1804 Sanchez St

PHONE: 512.810.8331

SIGNATURE John Hofstetter

September 5, 2014

B2/9/5

Dear Neighbor,

My husband Graham, daughter Edie (4) and I live on 1802 Sanchez Street. We also own the vacant lot directly behind us at 1803 Clifford Avenue, where we are planning to begin construction on a new single-family home in October. After submitting our design plans to the city, we have run into a code interpretation issue regarding what does and does not count toward the maximum FAR (gross floor to area ratio) for our lot. On October 1st, we will be presenting our case to the Residential Design & Compatibility Commission (RDCC), who have the power to grant a variance for an increase in FAR for up to 25%.

This letter is to inform you and to ask for your support in our request. We submitted plans for a home that we had calculated to be 2,298 sq ft (max allowed is 2,300). While we feel that a home this size is more than ample for a single family, it would also accommodate our desire for a home-school classroom as well space for our aging parents, all of whom live nearby. The differing interpretation of the code that we are running into relates to an exterior covered breezeway, that we understood to be exempt; but that will now count toward FAR, effectively adding 80 sq ft to the calculation.

Because we will be approaching the RDCC with this request, we would also like to make two more small design changes. We would like to cover a first floor 5' x 10' exterior walkway, which will require a side wall articulation variance on the south side of the building. We would also like to add 12-18 inches of height to the second floor office/guest room, which is currently uncomfortably low (8ft peak; 3ft sides). **Our requested changes will result in a total increase of approx. 12% FAR (around 266 sq ft). Please note that none of the proposed changes will alter the overall scale or massing of the home from its original design. There will be no visible change to the exterior of the home from the street, making it effectively the same project. In fact, we are not "adding" space at all. This increase is purely a matter of how (mostly exterior) spaces are calculated.**

We have worked hard to design a home that we feel fits well into the neighborhood, while adding value and beauty. We feel that the proposed changes will not infringe on you as our neighbors. If you are in support of our request, please sign under the below statement.

Please do not hesitate to contact us with any questions or concerns.

Sincerely,

Amanda and Graham Davidson
1802 Sanchez Street
512-698-2987 (Amanda's cell phone)
512-694-8663 (Graham's cell phone)

"I support Graham and Amanda Davidson's request for a variance for an FAR increase of around 12 % (approximately 266 sq ft) as well as a waiver on the side wall articulation for the 1803 Clifford Avenue project."

PRINTED NAME: Tonya Fairly

HOME ADDRESS: 1807 Sanchez St.

PHONE: 512-902-9942

SIGNATURE

September 5, 2014

B2/60

Dear Neighbor,

My husband Graham, daughter Edie (4) and I live on 1802 Sanchez Street. We also own the vacant lot directly behind us at 1803 Clifford Avenue, where we are planning to begin construction on a new single-family home in October. After submitting our design plans to the city, we have run into a code interpretation issue regarding what does and does not count toward the maximum FAR (gross floor to area ratio) for our lot. On October 1st, we will be presenting our case to the Residential Design & Compatibility Commission (RDCC), who have the power to grant a variance for an increase in FAR for up to 25%.

This letter is to inform you and to ask for your support in our request. We submitted plans for a home that we had calculated to be 2,298 sq ft (max allowed is 2,300). While we feel that a home this size is more than ample for a single family, it would also accommodate our desire for a home-school classroom as well space for our aging parents, all of whom live nearby. The differing interpretation of the code that we are running into relates to an exterior covered breezeway, that we understood to be exempt; but that will now count toward FAR, effectively adding 80 sq ft to the calculation.

Because we will be approaching the RDCC with this request, we would also like to make two more small design changes. We would like to cover a first floor 5' x 10' exterior walkway, which will require a side wall articulation variance on the south side of the building. We would also like to add 12-18 inches of height to the second floor office/guest room, which is currently uncomfortably low (8ft peak; 3ft sides). **Our requested changes will result in a total increase of approx. 12% FAR (around 266 sq ft). Please note that none of the proposed changes will alter the overall scale or massing of the home from its original design. There will be no visible change to the exterior of the home from the street, making it effectively the same project. In fact, we are not "adding" space at all. This increase is purely a matter of how (mostly exterior) spaces are calculated.**

We have worked hard to design a home that we feel fits well into the neighborhood, while adding value and beauty. We feel that the proposed changes will not infringe on you as our neighbors. If you are in support of our request, please sign under the below statement.

Please do not hesitate to contact us with any questions or concerns.

Sincerely,

Amanda and Graham Davidson
1802 Sanchez Street
512-698-2987 (Amanda's cell phone)
512-694-8663 (Graham's cell phone)

"I support Graham and Amanda Davidson's request for a variance for an FAR increase of around 12 % (approximately 266 sq ft) as well as a waiver on the side wall articulation for the 1803 Clifford Avenue project."

PRINTED NAME: Melissa McFarling

HOME ADDRESS: 1708 Sanchez St., Austin, TX 78702

PHONE: 512-940-3532

SIGNATURE Melissa McFarling

September 5, 2014

B2
1of1

Dear Neighbor,

My husband Graham, daughter Edie (4) and I live on 1802 Sanchez Street. We also own the vacant lot directly behind us at 1803 Clifford Avenue, where we are planning to begin construction on a new single-family home in October. After submitting our design plans to the city, we have run into a code interpretation issue regarding what does and does not count toward the maximum FAR (gross floor to area ratio) for our lot. On October 1st, we will be presenting our case to the Residential Design & Compatibility Commission (RDCC), who have the power to grant a variance for an increase in FAR for up to 25%.

This letter is to inform you and to ask for your support in our request. We submitted plans for a home that we had calculated to be 2,298 sq ft (max allowed is 2,300). While we feel that a home this size is more than ample for a single family, it would also accommodate our desire for a home-school classroom as well space for our aging parents, all of whom live nearby. The differing interpretation of the code that we are running into relates to an exterior covered breezeway, that we understood to be exempt; but that will now count toward FAR, effectively adding 80 sq ft to the calculation.

Because we will be approaching the RDCC with this request, we would also like to make two more small design changes. We would like to cover a first floor 5' x 10' exterior walkway, which will require a side wall articulation variance on the south side of the building. We would also like to add 12-18 inches of height to the second floor office/guest room, which is currently uncomfortably low (8ft peak; 3ft sides). **Our requested changes will result in a total increase of approx. 12% FAR (around 266 sq ft). Please note that none of the proposed changes will alter the overall scale or massing of the home from its original design. There will be no visible change to the exterior of the home from the street, making it effectively the same project. In fact, we are not "adding" space at all. This increase is purely a matter of how (mostly exterior) spaces are calculated.**

We have worked hard to design a home that we feel fits well into the neighborhood, while adding value and beauty. We feel that the proposed changes will not infringe on you as our neighbors. If you are in support of our request, please sign under the below statement.

Please do not hesitate to contact us with any questions or concerns.

Sincerely,

Amanda and Graham Davidson
1802 Sanchez Street
512-698-2987 (Amanda's cell phone)
512-694-8663 (Graham's cell phone)

"I support Graham and Amanda Davidson's request for a variance for an FAR increase of around 12 % (approximately 266 sq ft) as well as a waiver on the side wall articulation for the 1803 Clifford Avenue project."

PRINTED NAME: RAPHAEL PANIAGUA

HOME ADDRESS: 1806 Sanches

PHONE: _____

SIGNATURE _____

September 5, 2014

B2/62

Dear Neighbor,

My husband Graham, daughter Edie (4) and I live on 1802 Sanchez Street. We also own the vacant lot directly behind us at 1803 Clifford Avenue, where we are planning to begin construction on a new single-family home in October. After submitting our design plans to the city, we have run into a code interpretation issue regarding what does and does not count toward the maximum FAR (gross floor to area ratio) for our lot. On October 1st, we will be presenting our case to the Residential Design & Compatibility Commission (RDCC), who have the power to grant a variance for an increase in FAR for up to 25%.

This letter is to inform you and to ask for your support in our request. We submitted plans for a home that we had calculated to be 2,298 sq ft (max allowed is 2,300). While we feel that a home this size is more than ample for a single family, it would also accommodate our desire for a home-school classroom as well space for our aging parents, all of whom live nearby. The differing interpretation of the code that we are running into relates to an exterior covered breezeway, that we understood to be exempt; but that will now count toward FAR, effectively adding 80 sq ft to the calculation.

Because we will be approaching the RDCC with this request, we would also like to make two more small design changes. We would like to cover a first floor 5' x 10' exterior walkway, which will require a side wall articulation variance on the south side of the building. We would also like to add 12-18 inches of height to the second floor office/guest room, which is currently uncomfortably low (8ft peak; 3ft sides). **Our requested changes will result in a total increase of approx. 12% FAR (around 266 sq ft). Please note that none of the proposed changes will alter the overall scale or massing of the home from its original design. There will be no visible change to the exterior of the home from the street, making it effectively the same project. In fact, we are not "adding" space at all. This increase is purely a matter of how (mostly exterior) spaces are calculated.**

We have worked hard to design a home that we feel fits well into the neighborhood, while adding value and beauty. We feel that the proposed changes will not infringe on you as our neighbors. If you are in support of our request, please sign under the below statement.

Please do not hesitate to contact us with any questions or concerns.

Sincerely,

Amanda and Graham Davidson
1802 Sanchez Street
512-698-2987 (Amanda's cell phone)
512-694-8663 (Graham's cell phone)

"I support Graham and Amanda Davidson's request for a variance for an FAR increase of around 12 % (approximately 266 sq ft) as well as a waiver on the side wall articulation for the 1803 Clifford Avenue project."

PRINTED NAME: Cornelius Byrd

HOME ADDRESS: 1811 Sanchez 78702

PHONE: 512-701-2603

SIGNATURE Cornelius Byrd

September 5, 2014

B2/63

Dear Neighbor,

My husband Graham, daughter Edie (4) and I live on 1802 Sanchez Street. We also own the vacant lot directly behind us at 1803 Clifford Avenue, where we are planning to begin construction on a new single-family home in October. After submitting our design plans to the city, we have run into a code interpretation issue regarding what does and does not count toward the maximum FAR (gross floor to area ratio) for our lot. On October 1st, we will be presenting our case to the Residential Design & Compatibility Commission (RDCC), who have the power to grant a variance for an increase in FAR for up to 25%.

This letter is to inform you and to ask for your support in our request. We submitted plans for a home that we had calculated to be 2,298 sq ft (max allowed is 2,300). While we feel that a home this size is more than ample for a single family, it would also accommodate our desire for a home-school classroom as well space for our aging parents, all of whom live nearby. The differing interpretation of the code that we are running into relates to an exterior covered breezeway, that we understood to be exempt; but that will now count toward FAR, effectively adding 80 sq ft to the calculation.

Because we will be approaching the RDCC with this request, we would also like to make two more small design changes. We would like to cover a first floor 5' x 10' exterior walkway, which will require a side wall articulation variance on the south side of the building. We would also like to add 12-18 inches of height to the second floor office/guest room, which is currently uncomfortably low (8ft peak; 3ft sides). **Our requested changes will result in a total increase of approx. 12% FAR (around 266 sq ft). Please note that none of the proposed changes will alter the overall scale or massing of the home from its original design. There will be no visible change to the exterior of the home from the street, making it effectively the same project. In fact, we are not "adding" space at all. This increase is purely a matter of how (mostly exterior) spaces are calculated.**

We have worked hard to design a home that we feel fits well into the neighborhood, while adding value and beauty. We feel that the proposed changes will not infringe on you as our neighbors. If you are in support of our request, please sign under the below statement.

Please do not hesitate to contact us with any questions or concerns.

Sincerely,

Amanda and Graham Davidson
1802 Sanchez Street
512-698-2987 (Amanda's cell phone)
512-694-8663 (Graham's cell phone)

"I support Graham and Amanda Davidson's request for a variance for an FAR increase of around 12 % (approximately 266 sq ft) as well as a waiver on the side wall articulation for the 1803 Clifford Avenue project."

PRINTED NAME: CAROLYNN REED

HOME ADDRESS: 1608 SANCHEZ ST, 78702

PHONE: 512-656-6339

SIGNATURE

September 5, 2014

B2/64

Dear Neighbor,

My husband Graham, daughter Edie (4) and I live on 1802 Sanchez Street. We also own the vacant lot directly behind us at 1803 Clifford Avenue, where we are planning to begin construction on a new single-family home in October. After submitting our design plans to the city, we have run into a code interpretation issue regarding what does and does not count toward the maximum FAR (gross floor to area ratio) for our lot. On October 1st, we will be presenting our case to the Residential Design & Compatibility Commission (RDCC), who have the power to grant a variance for an increase in FAR for up to 25%.

This letter is to inform you and to ask for your support in our request. We submitted plans for a home that we had calculated to be 2,298 sq ft (max allowed is 2,300). While we feel that a home this size is more than ample for a single family, it would also accommodate our desire for a home-school classroom as well space for our aging parents, all of whom live nearby. The differing interpretation of the code that we are running into relates to an exterior covered breezeway, that we understood to be exempt; but that will now count toward FAR, effectively adding 80 sq ft to the calculation.

Because we will be approaching the RDCC with this request, we would also like to make two more small design changes. We would like to cover a first floor 5' x 10' exterior walkway, which will require a side wall articulation variance on the south side of the building. We would also like to add 12-18 inches of height to the second floor office/guest room, which is currently uncomfortably low (8ft peak; 3ft sides). **Our requested changes will result in a total increase of approx. 12% FAR (around 266 sq ft). Please note that none of the proposed changes will alter the overall scale or massing of the home from its original design. There will be no visible change to the exterior of the home from the street, making it effectively the same project. In fact, we are not "adding" space at all. This increase is purely a matter of how (mostly exterior) spaces are calculated.**

We have worked hard to design a home that we feel fits well into the neighborhood, while adding value and beauty. We feel that the proposed changes will not infringe on you as our neighbors. If you are in support of our request, please sign under the below statement.

Please do not hesitate to contact us with any questions or concerns.

Sincerely,

Amanda and Graham Davidson
1802 Sanchez Street
512-698-2987 (Amanda's cell phone)
512-694-8663 (Graham's cell phone)

"I support Graham and Amanda Davidson's request for a variance for an FAR increase of around 12 % (approximately 266 sq ft) as well as a waiver on the side wall articulation for the 1803 Clifford Avenue project."

PRINTED NAME: Keven Gedko

HOME ADDRESS: 1709 Sanchez St. Austin, TX 78702

PHONE: 512.680.7206

SIGNATURE Keven Gedko

September 5, 2014

B2/65

Dear Neighbor,

My husband Graham, daughter Edie (4) and I live on 1802 Sanchez Street. We also own the vacant lot directly behind us at 1803 Clifford Avenue, where we are planning to begin construction on a new single-family home in October. After submitting our design plans to the city, we have run into a code interpretation issue regarding what does and does not count toward the maximum FAR (gross floor to area ratio) for our lot. On October 1st, we will be presenting our case to the Residential Design & Compatibility Commission (RDCC), who have the power to grant a variance for an increase in FAR for up to 25%.

This letter is to inform you and to ask for your support in our request. We submitted plans for a home that we had calculated to be 2,298 sq ft (max allowed is 2,300). While we feel that a home this size is more than ample for a single family, it would also accommodate our desire for a home-school classroom as well space for our aging parents, all of whom live nearby. The differing interpretation of the code that we are running into relates to an exterior covered breezeway, that we understood to be exempt; but that will now count toward FAR, effectively adding 80 sq ft to the calculation.

Because we will be approaching the RDCC with this request, we would also like to make two more small design changes. We would like to cover a first floor 5' x 10' exterior walkway, which will require a side wall articulation variance on the south side of the building. We would also like to add 12-18 inches of height to the second floor office/guest room, which is currently uncomfortably low (8ft peak; 3ft sides). **Our requested changes will result in a total increase of approx. 12% FAR (around 266 sq ft). Please note that none of the proposed changes will alter the overall scale or massing of the home from its original design. There will be no visible change to the exterior of the home from the street, making it effectively the same project. In fact, we are not "adding" space at all. This increase is purely a matter of how (mostly exterior) spaces are calculated.**

We have worked hard to design a home that we feel fits well into the neighborhood, while adding value and beauty. We feel that the proposed changes will not infringe on you as our neighbors. If you are in support of our request, please sign under the below statement.

Please do not hesitate to contact us with any questions or concerns.

Sincerely,

Amanda and Graham Davidson
1802 Sanchez Street
512-698-2987 (Amanda's cell phone)
512-694-8663 (Graham's cell phone)

"I support Graham and Amanda Davidson's request for a variance for an FAR increase of around 12 % (approximately 266 sq ft) as well as a waiver on the side wall articulation for the 1803 Clifford Avenue project."

PRINTED NAME: GEORGIA WRIGHT

HOME ADDRESS: 1800 SANCHEZ ST 78702

PHONE: 5124768475

SIGNATURE Georgia Wright

September 5, 2014

B2/69

Dear Neighbor,

My husband Graham, daughter Edie (4) and I live on 1802 Sanchez Street. We also own the vacant lot directly behind us at 1803 Clifford Avenue, where we are planning to begin construction on a new single-family home in October. After submitting our design plans to the city, we have run into a code interpretation issue regarding what does and does not count toward the maximum FAR (gross floor to area ratio) for our lot. On October 1st, we will be presenting our case to the Residential Design & Compatibility Commission (RDCC), who have the power to grant a variance for an increase in FAR for up to 25%.

This letter is to inform you and to ask for your support in our request. We submitted plans for a home that we had calculated to be 2,298 sq ft (max allowed is 2,300). While we feel that a home this size is more than ample for a single family, it would also accommodate our desire for a home-school classroom as well space for our aging parents, all of whom live nearby. The differing interpretation of the code that we are running into relates to an exterior covered breezeway, that we understood to be exempt; but that will now count toward FAR, effectively adding 80 sq ft to the calculation.

Because we will be approaching the RDCC with this request, we would also like to make two more small design changes. We would like to cover a first floor 5' x 10' exterior walkway, which will require a side wall articulation variance on the south side of the building. We would also like to add 12-18 inches of height to the second floor office/guest room, which is currently uncomfortably low (8ft peak; 3ft sides). **Our requested changes will result in a total increase of approx. 12% FAR (around 266 sq ft). Please note that none of the proposed changes will alter the overall scale or massing of the home from its original design. There will be no visible change to the exterior of the home from the street, making it effectively the same project. In fact, we are not "adding" space at all. This increase is purely a matter of how (mostly exterior) spaces are calculated.**

We have worked hard to design a home that we feel fits well into the neighborhood, while adding value and beauty. We feel that the proposed changes will not infringe on you as our neighbors. If you are in support of our request, please sign under the below statement.

Please do not hesitate to contact us with any questions or concerns.

Sincerely,

Amanda and Graham Davidson
1802 Sanchez Street
512-698-2987 (Amanda's cell phone)
512-694-8663 (Graham's cell phone)

"I support Graham and Amanda Davidson's request for a variance for an FAR increase of around 12 % (approximately 266 sq ft) as well as a waiver on the side wall articulation for the 1803 Clifford Avenue project."

PRINTED NAME: Jonathan Hallmark

HOME ADDRESS: 1805 Sanchez St Austin, Tx 78702

PHONE: 512-963-7479

SIGNATURE

September 5, 2014

B2/7+9

Dear Neighbor,

My husband Graham, daughter Edie (4) and I live on 1802 Sanchez Street. We also own the vacant lot directly behind us at 1803 Clifford Avenue, where we are planning to begin construction on a new single-family home in October. After submitting our design plans to the city, we have run into a code interpretation issue regarding what does and does not count toward the maximum FAR (gross floor to area ratio) for our lot. On October 1st, we will be presenting our case to the Residential Design & Compatibility Commission (RDCC), who have the power to grant a variance for an increase in FAR for up to 25%.

This letter is to inform you and to ask for your support in our request. We submitted plans for a home that we had calculated to be 2,298 sq ft (max allowed is 2,300). While we feel that a home this size is more than ample for a single family, it would also accommodate our desire for a home-school classroom as well space for our aging parents, all of whom live nearby. The differing interpretation of the code that we are running into relates to an exterior covered breezeway, that we understood to be exempt; but that will now count toward FAR, effectively adding 80 sq ft to the calculation.

Because we will be approaching the RDCC with this request, we would also like to make two more small design changes. We would like to cover a first floor 5' x 10' exterior walkway, which will require a side wall articulation variance on the south side of the building. We would also like to add 12-18 inches of height to the second floor office/guest room, which is currently uncomfortably low (8ft peak; 3ft sides). **Our requested changes will result in a total increase of approx. 12% FAR (around 266 sq ft). Please note that none of the proposed changes will alter the overall scale or massing of the home from its original design. There will be no visible change to the exterior of the home from the street, making it effectively the same project. In fact, we are not "adding" space at all. This increase is purely a matter of how (mostly exterior) spaces are calculated.**

We have worked hard to design a home that we feel fits well into the neighborhood, while adding value and beauty. We feel that the proposed changes will not infringe on you as our neighbors. If you are in support of our request, please sign under the below statement.

Please do not hesitate to contact us with any questions or concerns.

Sincerely,

Amanda and Graham Davidson
1802 Sanchez Street
512-698-2987 (Amanda's cell phone)
512-694-8663 (Graham's cell phone)

"I support Graham and Amanda Davidson's request for a variance for an FAR increase of around 12 % (approximately 266 sq ft) as well as a waiver on the side wall articulation for the 1803 Clifford Avenue project."

PRINTED NAME: James Morgan

HOME ADDRESS: 1701-A Sanchez St

PHONE: 512-496-5523

SIGNATURE

B2/68

Sept 9, 2014

As the owners of the property at 1807 Clifford Ave., we support the requested variance from our neighbors at 1802 Sanchez.

Terrie Thomas
Nice Girls Buy Houses LLC
512 656-7657

2/5
8/9


1806 CLIFFORD AVE. FAR = 16.11%

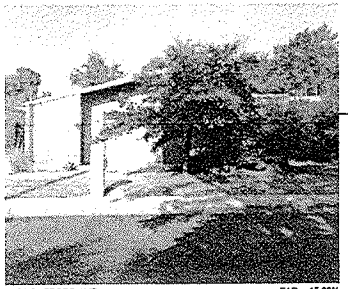
1804 CLIFFORD AVE. FAR = 15.02%

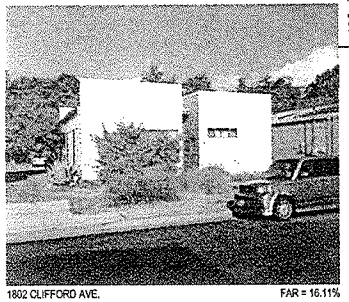
1802 CLIFFORD AVE. FAR = 16.11%

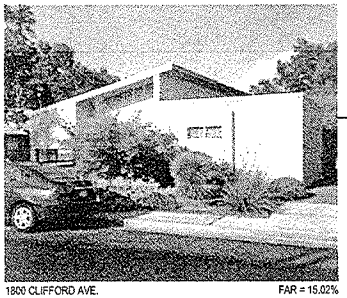
1800 CLIFFORD AVE. FAR = 15.02%

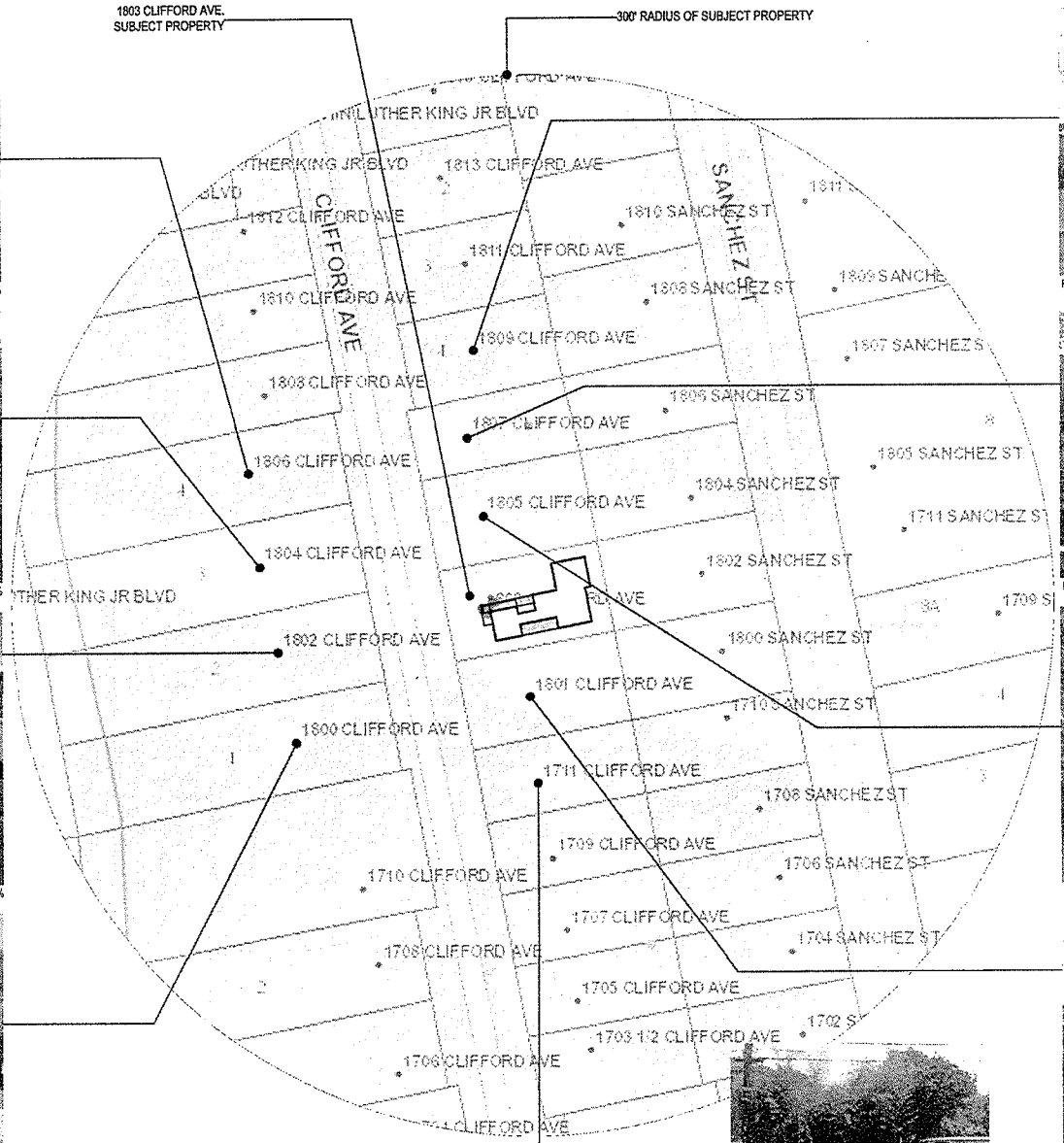

NEIGHBORHOOD CONTEXT MAP
SCALE: 1/32" = 1'-0"

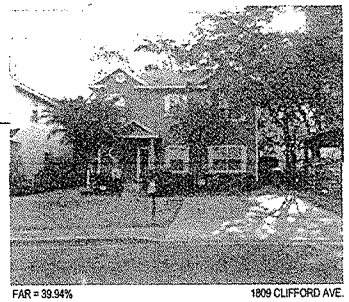
FAR = 39.94% 1809 CLIFFORD AVE.


FAR = 47.21% 1807 CLIFFORD AVE.

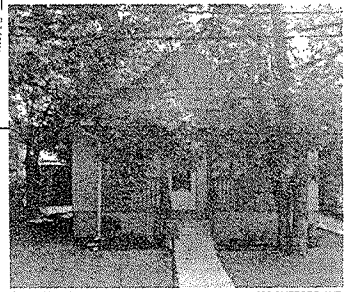
FAR = 18.14% 1805 CLIFFORD AVE.

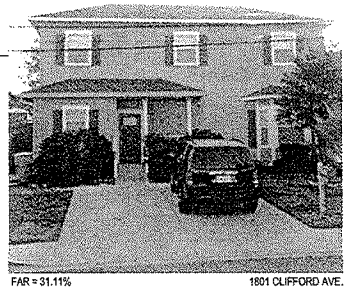
FAR = 31.11% 1801 CLIFFORD AVE.

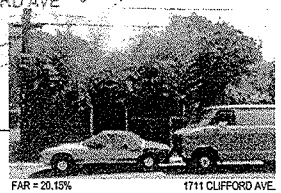
FAR = 20.15% 1711 CLIFFORD AVE.

ARBIB HUGHEY DESIGN
2235 EAST 6th ST. #104 AUSTIN, TX 78702

project info:

project name:
DAVIDSON RESIDENCE

physical location:
1803 CLIFFORD STREET
AUSTIN, TEXAS 78702

owners:
Amanda & Graham Davidson
1602 Sanchez Street
Austin, TX 78702
512.698.2987

contractor:
Amanda Davidson
M3s Group / FPT, LLC
1602 Sanchez Street
Austin, TX 78702
512.698.2987

engineer:
LEAPSTRUCTURES
3001 S. Lamar Blvd., Suite A-230
Austin, TX 78704-6063
512.208-3999

phase info:

set:
RDCC APPLICATION SET

date: 2014.09.09

revisions:

UNLESS SIGNED AND SEALED BY THE ARCHITECT, THESE DRAWINGS MAY NOT BE USED FOR REGULATORY APPROVAL, PERMITTING, OR CONSTRUCTION

drawing info:

SITE CONTEXT MAP

2/0
B/2

CURRENT DESIGN

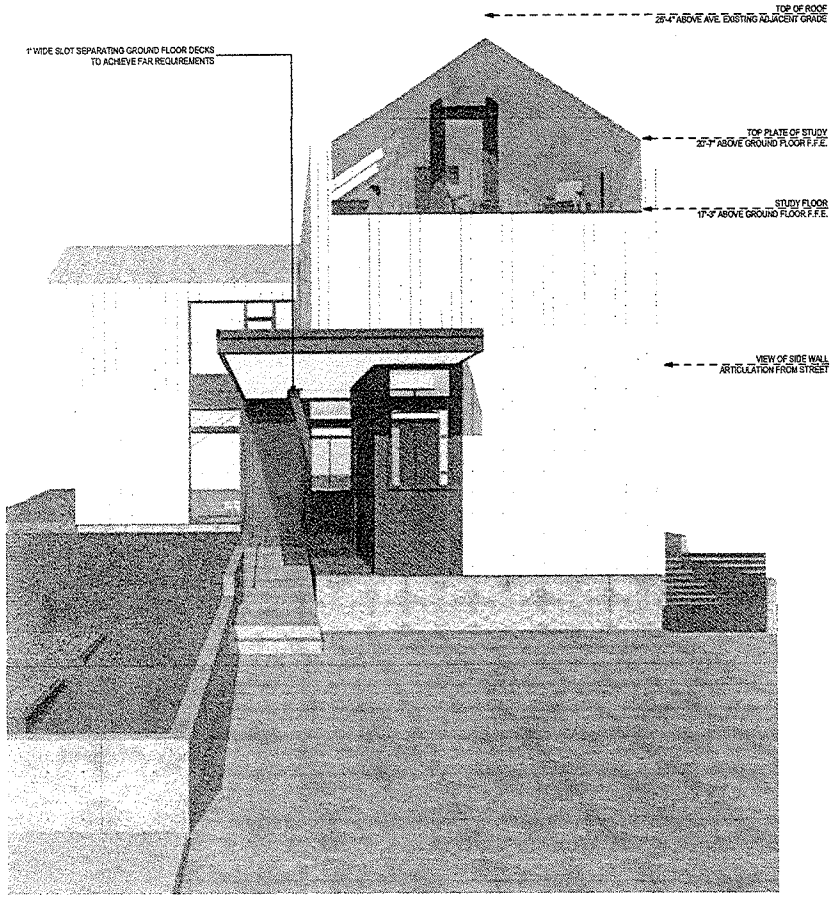

FLOOR AREA RATIO = 2,298 SF

LOT SIZE.: 4,885 SF

GROSS FLOOR AREA: 1ST FLOOR: 1,105 SF (CONDITIONED SPACE)

<u>***NOTE: ALL GROUND FLOOR DECKS COVERED AND NOT COVERED BY HABITABLE SPACE ABOVE ARE UNDER 200 SF EACH AND ARE NOT CALCULATED IN FAR***</u>

GROSS FLOOR AREA: 2ND FLOOR: 1,193 SF

TOTAL GROSS FLOOR AREA : 2,298 SF

(TOTAL GROSS FLOOR AREA ALLOWED: 2,300 SF)

PROPOSED DESIGN

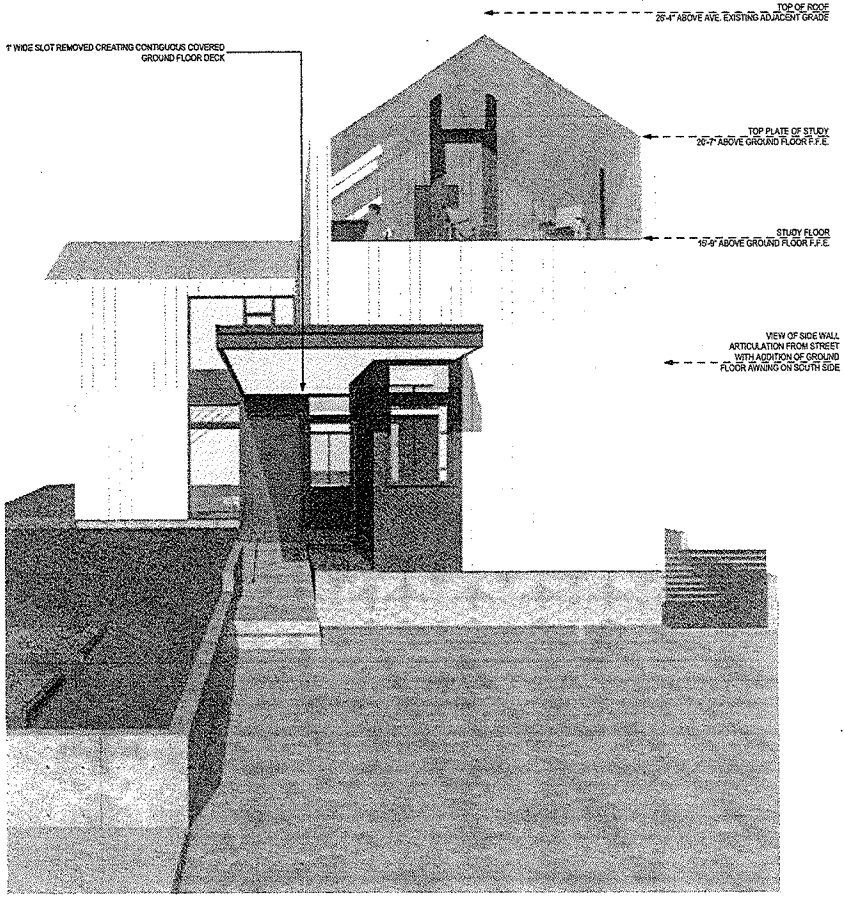

FLOOR AREA RATIO = 2,566 SF

LOT SIZE.: 4,885 SF

GROSS FLOOR AREA: 1ST FLOOR: 1,105 SF (CONDITIONED SPACE)

DECK: 207 SF (W/ 200 SF REDUCTION)

GROSS FLOOR AREA: 2ND FLOOR: 1,254 SF (W/ LOWERED STUDY)

TOTAL GROSS FLOOR AREA : 2,566 SF

(TOTAL GROSS FLOOR AREA ALLOWED: 2,300 SF)

TOTAL GROSS FLOOR AREA : 266 OVER SF

<u>CHANGES REQUESTED:</u>

1/ LOWER SECOND FLOOR STUDY FLOOR BY 1'-6 ; CEILING AND ROOF HEIGHT TO REMAIN AS IS.
2/ ADD IN FIRST FLOOR AWNING IN ARTICULATED SPACE ON SOUTH SIDE OF BUILDING
3/ CONNECT AWNING STRUCTURES WITH DECK COVERED BY HABITABLE SPACE ABOVE

ARBIB HUGHEY DESIGN
2235 EAST 6th ST. #104 AUSTIN, TX 78702

project info:

project name:
DAVIDSON RESIDENCE

physical location:
1803 CLIFFORD STREET
AUSTIN, TEXAS 78702

owners:
Amanda & Graham Davidson
1802 Sanchez Street
Austin, TX 78702
512.698.2987

contractor:
Amanda Davidson
Kita Group / FPT, LLC
1802 Sanchez Street
Austin, TX 78702
512.698.2987

engineer:
LEAPISTRUCTURES
3001 S. Lamar Blvd., Suite A-230
Austin, TX 78704-6883
512.295-3999

phase info:

set:
RDCC APPLICATION SET

date: 2014.09.09

revisions:

UNLESS SIGNED AND SEALED BY THE ARCHITECT, THESE DRAWINGS MAY NOT BE USED FOR REGULATORY APPROVAL, PERMITTING, OR CONSTRUCTION

drawing info:

FRONT OF HOUSE COMPARISON RENDERINGS

SUBJECT PROPERT TAX ROll

B2/71

Property Search Results > 838764 DAVIDSON AUSTIN & AMANDA for Year 2014

Property

Account

Property ID:	838764	Legal Description:	0.1121A OF LOT 15 OLT 28 DIVISION B
Geographic ID:	0212130222	Agent Code:	
Type:	Real		
Property Use Code:			
Property Use Description:			

Location

Address:	1803 CLIFFORD AVE TX 78702	Mapsco:	586J
Neighborhood:	E0530	Map ID:	021011
Neighborhood CD:	E0530		

Owner

Name:	DAVIDSON AUSTIN & AMANDA	Owner ID:	1440853
Mailing Address:	1802 SANCHEZ ST AUSTIN , TX 78702-1645	% Ownership:	100.0000000000%
		Exemptions:	HS

Values

(+) Improvement Homesite Value:	+	$5,647		
(+) Improvement Non-Homesite Value:	+	$0		
(+) Land Homesite Value:	+	$102,000		
(+) Land Non-Homesite Value:	+	$0	Ag / Timber Use Value	
(+) Agricultural Market Valuation:	+	$0		$0
(+) Timber Market Valuation:	+	$0		$0

(=) Market Value:	=	$107,647		
(–) Ag or Timber Use Value Reduction:	–	$0		

(=) Appraised Value:	=	$107,647		
(–) HS Cap:	–	$0		

(=) Assessed Value:	=	$107,647		

Taxing Jurisdiction

Owner: DAVIDSON AUSTIN & AMANDA
% Ownership: 100.0000000000%
Total Value: $107,647

Entity	Description	Tax Rate	Appraised Value	Taxable Value	Estimated Tax
01	AUSTIN ISD	1.222000	$107,647	$107,647	$1,315.45
02	CITY OF AUSTIN	0.502700	$107,647	$107,647	$541.14
03	TRAVIS COUNTY	0.494600	$107,647	$86,118	$425.94
0A	TRAVIS CENTRAL APP DIST	0.000000	$107,647	$107,647	$0.00
2J	TRAVIS COUNTY HEALTHCARE DISTRICT	0.129000	$107,647	$86,118	$111.09

B2/72

68	AUSTIN COMM COLL DIST	0.094900	$107,647	$102,647	$97.4
	Total Tax Rate:	2.443200			

Taxes w/Current Exemptions: $2,491.03
Taxes w/o Exemptions: $2,630.03

Improvement / Building

Improvement #1: 1 FAM DWELLING **State Code:** A3 **Living Area:** 1.0 sqft **Value:** $5,647

Type	Description	Class CD	Exterior Wall	Year Built	SQFT
1ST	1st Floor	D55 - 1		2009	1.0
288	SHED SF	A - 3		2009	504.0

Land

#	Type	Description	Acres	Sqft	Eff Front	Eff Depth	Market Value	Prod. Value
1	LAND	Land	0.1121	4885.00	0.00	0.00	$102,000	$0

Roll Value History

Year	Improvements	Land Market	Ag Valuation	Appraised	HS Cap	Assessed
2014	$5,647	$102,000	0	107,647	$0	$107,647

Deed History - (Last 3 Deed Transactions)

#	Deed Date	Type	Description	Grantor	Grantee	Volume	Page	Deed Number
1	12/17/2013	MS	MISCELLANEOUS	MARASCO FRANK JR	DAVIDSON AUSTIN & AMANDA			2013222178TR
2	11/25/2013	CD	CORRECTION DEED	MARASCO FRANK JR	DAVIDSON AUSTIN & AMANDA			2013215038TR
3	4/9/2009	WD	WARRANTY DEED	MARASCO FRANK JR	DAVIDSON AUSTIN & AMANDA			2009059531TR

Questions Please Call (512) 834-9317

This site requires cookies to be enabled in your browser settings.

Website version: 1.2.2.3 Database last updated on: 9/5/2014 1:36 AM

This site only supports Internet Explorer 6+, Netscape 7+ and Firefox 1.5+.

B2/3

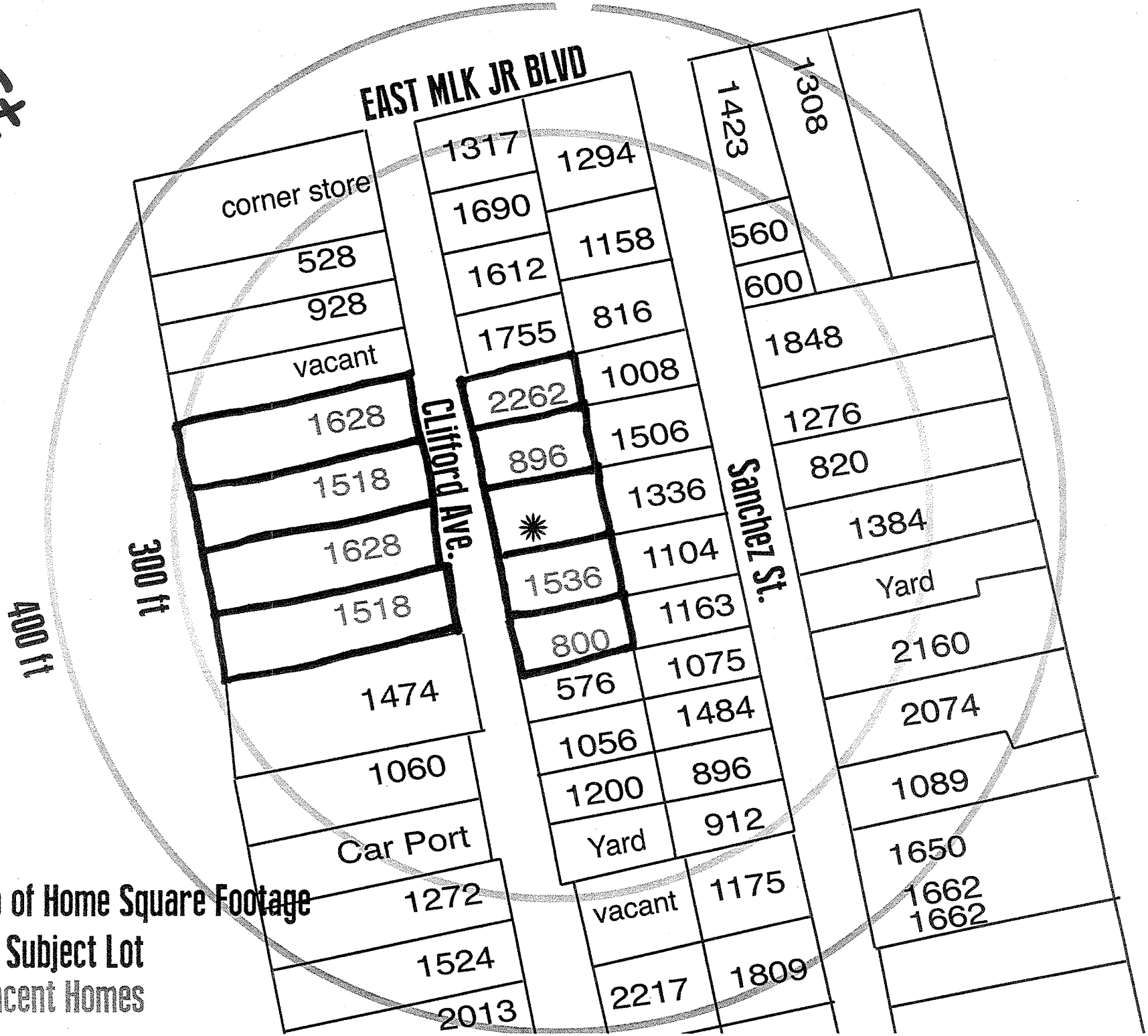

Map of Home Square Footage

✳ Subject Lot

Adjacent Homes

B2/H2

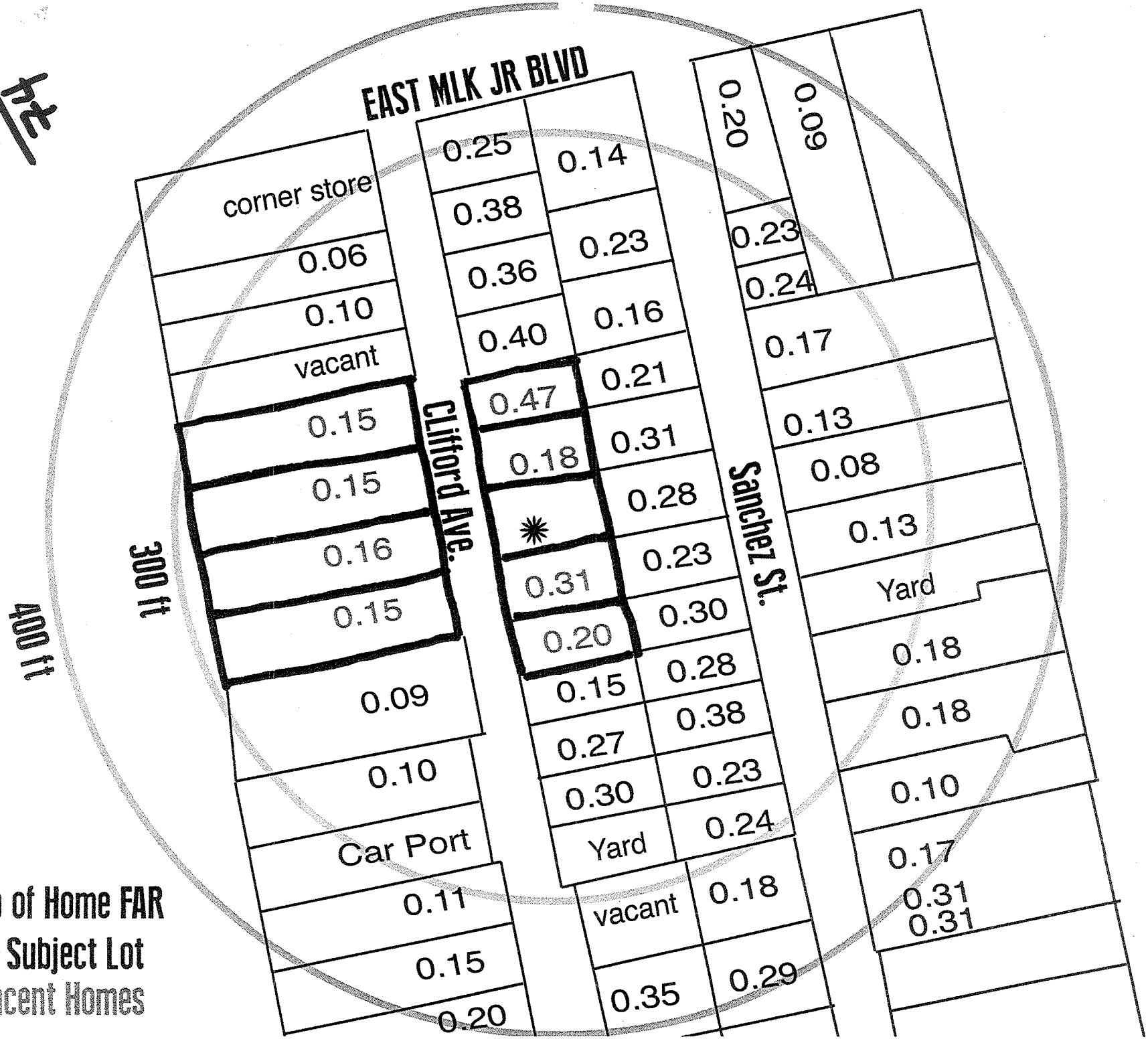

Map of Home FAR

✳ Subject Lot

Adjacent Homes

2/5 Blx

FAR CHART FOR SURROUNDING HOUSES

Proximity	Address	Lot Size	Home Square Footage	FAR	FAR over .40?
	1704 Clifford Ave.	11848	1272	0.11	
	1705 Clifford Ave.	3971	1200	0.30	
	1707 Clifford Ave.	3971	1056	0.27	
	1708 Clifford Ave.	10410	1060	0.10	
	1709 Clifford Ave.	3971	576	0.15	
	1710 Clifford Ave.	16511	1474	0.09	
Adjacent	1711 Clifford Ave.	3971	800	0.20	
Adjacent	1800 Clifford Ave.	10106	1518	0.15	
Adjacent	1801 Clifford Ave.	4938	1536	0.31	
Adjacent	1802 Clifford Ave.	10106	1628	0.16	
*** Subject**	**1803 Clifford Ave.**	**4885**	**2566(Proposed)**	0.53	Y
Adjacent	1804 Clifford Ave.	10106	1518	0.15	
Adjacent	1805 Clifford Ave.	4938	896	0.18	
Adjacent	1806 Clifford Ave.	10106	1628	0.16	
Adjacent	1807 Clifford Ave.	4791	2262	0.47	Y
	1809 Clifford Ave.	4395	1755.5	0.40	Y
	1810 Clifford Ave.	8955	928	0.10	
	1811 Clifford Ave.	4426	1612	0.36	
	1812 Clifford Ave.	8995	528	0.06	
	1813 Clifford Ave.	4445	1690	0.38	
	1815 Clifford Ave.	5292	1317	0.25	
	1700 Sanchez St.	6443	1175	0.18	
	1702 Sanchez St.	3845	912	0.24	
	1703 Sanchez St.	9825	1650	0.17	
	1704 Sanchez St.	3845	896	0.23	
	1705 Sanchez St.	11817	2074	0.18	

2/B/4

	1706 Sanchez St.	3862	1484	0.38	
	1707 Sanchez St.	11783	2160	0.18	
	1708 Sanchez St.	3845	1075	0.28	
	1709 Sanchez St.	10513	1384	0.13	
	1710 Sanchez St.	3845	1163	0.30	
	1711 Sanchez St.	10012	820	0.08	
	1800 Sanchez St.	4807	1104	0.23	
	1802 Sanchez St.	4796	1336	0.28	
	1804 Sanchez St.	4791	1506	0.31	
	1805 Sanchez St.	9892	1276	0.13	
	1806 Sanchez St.	4807	1008	0.21	
	1807 Sanchez St.	10890	1848	0.17	
	1808 Sanchez St.	5057	816	0.16	
	1809 Sanchez St.	2495	600	0.24	
	1810 Sanchez St.	5100	1158	0.23	
	1811 Sanchez St.	2441	560	0.23	
	2923 E MLK JR Blvd.	9233	1294	0.14	
400ft Radius	*2925 E MLK JR Blvd.*	*7130*	*1423*	*0.20*	
400ft Radius	*2927 E MLK JR Blvd.*	*14700*	*1308*	*0.09*	
400ft Radius	*1612 Sanchez St.*	*6262*	*1809*	*0.29*	
400ft Radius	*1701A Sanchez St.*	*5315*	*1662*	*0.31*	
400ft Radius	*1701B Sanchez St.*	*5315*	*1662*	*0.31*	
400ft Radius	*1700 Clifford Ave.*	*9950*	*2013*	*0.20*	
400ft Radius	*1701 Clifford Ave.*	*6262*	*2217*	*0.35*	
400ft Radius	*1702 Clifford Ave.*	*10074*	*1524*	*0.15*	