N

SUBJECT TRACT

PENDING CASE

ZONING BOUNDARY

NOTIFICATIONS

CASE#: C16-2016-0002

LOCATION: 11712 N. Lamar Blvd

1 " = 245 '

This product is for informational purposes and may not have been prepared for or be suitable for legal, engineering, or surveying purposes. It does not represent an on-the-ground survey and represents only the approximate relative location of property boundaries.

This product has been produced by CTM for the sole purpose of geographic reference. No warranty is made by the City of Austin regarding specific accuracy or completeness.

CITY OF AUSTIN FOUNDED 1839

GIS MapPlan View

CITY OF AUSTIN DEVELOPMENT WEB MAP

11712 N. Lamar
Surrounding zoning, uses

Legend

- Lot Lines
- Streets
- Building Footprints
- Named Creeks
- Lakes and Rivers
- Parks
- County
- Zoning (Large Map Scale
- Zoning Text

NO

THIS PRODUCT IS FOR INFORMATIONAL PURPOSES AND MAY NOT HAVE BEEN PREPARED FOR OR BE SUITABLE FOR LEGAL, ENGINEERING, OR SURVEYING PURPOSES. IT DOES NOT REPRESENT AN ON-THE-GROUND SURVEY AND REPRESENTS ONLY THE APPROXIMATE RELATIVE LOCATION OF PROPERTY BOUNDARIES. THIS PRODUCT HAS BEEN PRODUCED BY THE CITY OF AUSTIN FOR THE SOLE PURPOSE OF GEOGRAPHIC REFERENCE. NO WARRANTY IS MADE BY THE CITY OF AUSTIN REGARDING SPECIFIC ACCURACY OR COMPLETENESS.

DM

CASE # C16-2016-0002

ROW 11469351

ROLL 0252200114

TCAD ✓

CITY OF AUSTIN
APPLICATION TO SIGN REVIEW BOARD
SIGN VARIANCE

WARNING: Filing of this appeal stops all affected construction activity.

PLEASE: TYPE AND COMPLETE ALL REQUESTED INFORMATION.

STREET ADDRESS: 11712 N. LAMAR BLVD.

LEGAL DESCRIPTION: Subdivision – STARK FRANK - Prop. ID: 503140

Lot(s) 1+2 Block_____ Outlot_____ Division STARK FRANK

I/We Chandler Signs on behalf of myself/ourselves as authorized agent for WARSOW/TAYLOR affirm that on 21st, 2015 hereby apply for a hearing before the Sign Review Board for consideration:

ERECT – ATTACH – COMPLETE – REMODEL – MAINTAIN

1- new pylon - replacing "telephone" pole pylon currently onsite

in a CS-CO zoning district, located within the CS Sign District.

If your variance request is for a reduction in setbacks or height limits, please contact Lena Lund with the Electric Utility at 322-6587 before filing your application with this office to discuss your request. The Electric Utility will recommend the board deny your request if it will result in an encroachment into an electric easement or a NESC violation.

NOTE: The Board must determine the existence of, sufficiency of and weight of evidence supporting the findings described below. In order to grant your requeste for a variance, the Board must first make one or more of the findings described under 1, 2, and 3 below; the Board must then make the finding described in item 4 below. If the Board cannot make the required findings, it cannot approve a sign variance.

Therefore, you must complete each of the applicable Findings Statements as part of your application. Failure to do so may result in your application being rejected as incomplete. Please attach any additional support documents.

P/4

VARIANCE FINDINGS: I contend that my entitlement to the requested variance is based on the following findings:

1. The variance is necessary because strict enforcement of the Article prohibits any reasonable opportunity to provide adequate signs on the site, considering the unique features of a site such as its dimensions, landscaping, or topography, because:_____

OR,

2. The granting of this variance will not have a substantially adverse impact upon neighboring properties, because: It improves an old property that has been rundown/left to a state of disarray we are investing time & materials to improve a property in a challenged economic area. We are removing an old outdated/dangerous existing sign w/smaller current more effective sign.

OR,

3. The granting of this variance will not substantially conflict with the stated purposes of this sign ordinance, because:_____

AND,

4. Granting a variance would not provide the applicant with a special privilege not enjoyed by others similarly situated or potentially similarly situated, because: we are going back w a smaller sign. There is a billboard on property/Non premise.

APPLICANT CERTIFICATE – I affirm that my statements contained in the complete application are true and correct to the best of my knowledge and belief.

Signed [signature] Mail Address 3201 Manor way

City, State & Zip Dallas TX 75235

Printed Nick Fowlkes Phone 469-644-8862 Date 12/21/15

OWNERS CERTIFICATE – I affirm that my statements contained in the complete application are true and correct to the best of my knowledge and belief.

Signed [signature] Mail Address_____

City, State & Zip Austin TX

Printed Chris Caltman Phone 512-993 5583 Date 12/21/15

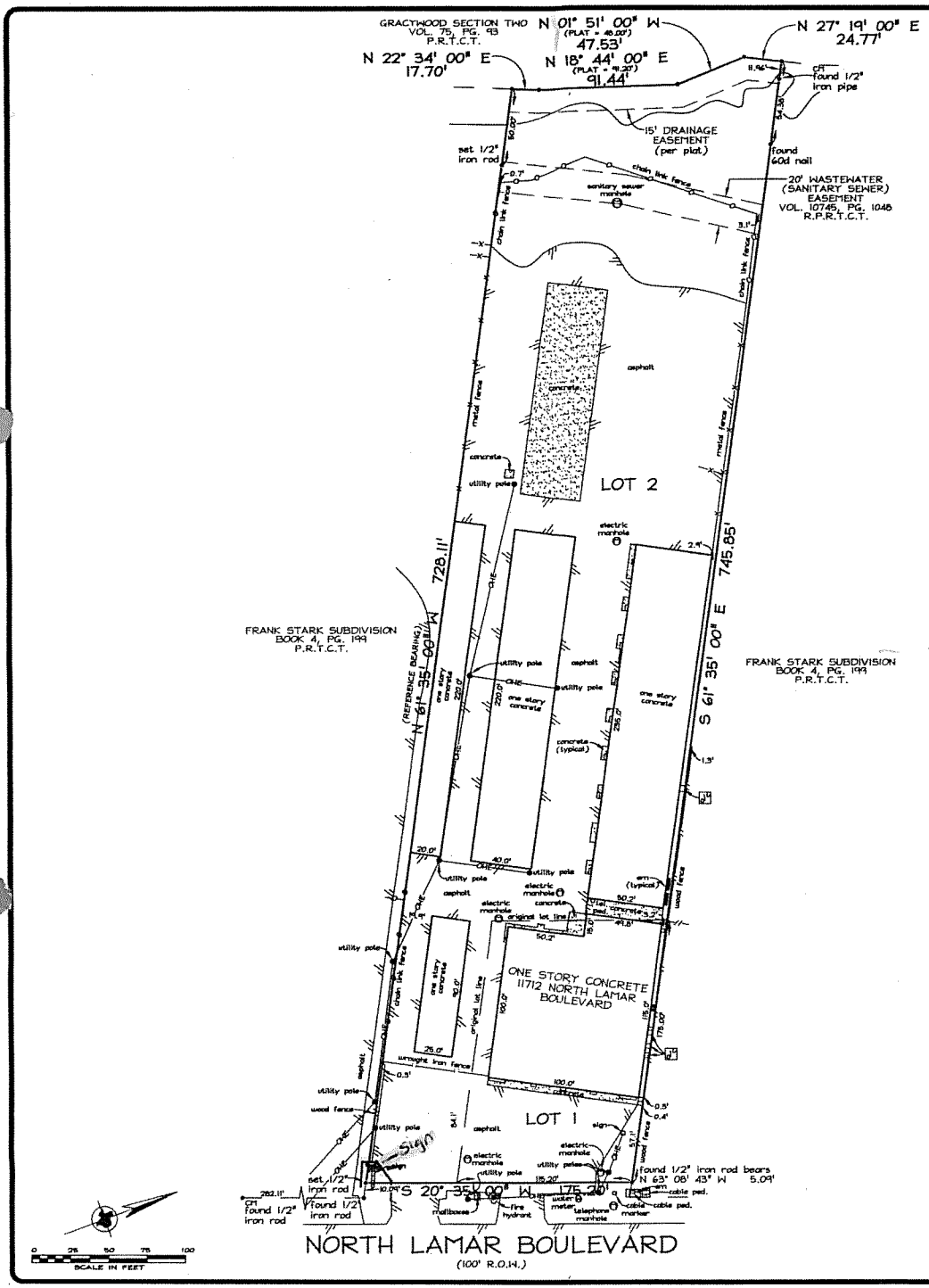

PROPERTY DESCRIPTION

Being Lots 1 and 2, of RESUB. LOT 6, FRANK STARK SUB., a subdivision in Travis County, Texas, according to the map or plat of record in Volume 51, Page 88, of the Plat Records of Travis County, Texas.

THIS IS TO DECLARE that on this date a survey was made on the ground, under my direction and supervision of the above described tract of land.

There are no visible conflicts, visible evidence of easements or rights-of-way, or protrusions, except as shown, and that this date the easements, rights-of-way or other locatable matters of record of which the undersigned has knowledge or has been advised are as shown or noted hereon.

The subject property does not appear to lie within the limits of a 100-year flood hazard zone according to the Map published by the Federal Emergency Management Agency, and has a Zone "X" Rating as shown by Map No. 48453C0270 H, dated SEPTEMBER 26, 2008. The statement that the property does or does not lie within a 100-year flood zone is not to be taken as a representation that the property will or will not flood. This survey is not to be used for construction purposes and is for the exclusive use of Gracy Title only and this survey is made pursuant to that one certain title commitment under the GF number 1106329, provided by the title company named hereon.

NOTES:

CM = CONTROLLING MONUMENT.

SUBJECT PROPERTY IS AFFECTED BY THE FOLLOWING:
(10c)-BLANKET EASEMENT, VOL. 8539, PG. 606, D.R.T.C.T.

SUBJECT PROPERTY IS NOT AFFECTED BY THE FOLLOWING:
(10e)-EASEMENT, VOL. 548, PG. 505, D.R.T.C.T.
(10f)-EASEMENT, VOL. 570, PG. 349, VOL. 570, PG. 444, VOL. 614, PG. 53, VOL. 655, PG. 389, D.R.T.C.T.
(10g)-EASEMENT, VOL. 632, PG. 105, D.R.T.C.T.

THE BEARINGS FOR THIS SURVEY ARE BASED ON THE RECORDED PLAT REFERENCED ABOVE.

ALL SET IRON RODS HAVE A PLASTIC CAP STAMPED "PRECISE LAND SURV."

STATE OF TEXAS
REGISTERED
J. T. THOMPSON
4804
PROFESSIONAL LAND SURVEYOR
Registered Professional Land Surveyor

REVISIONS	BY

PRECISE LAND SURVEYING, INC.
4625 EASTOVER DRIVE * MESQUITE, TEXAS 75149
(972) 681-7072 FAX (972) 279-1508

BOUNDARY SURVEY
11712 NORTH LAMAR
BOULEVARD
TRAVIS COUNTY, TEXAS

Precise Land Surveying, Inc.
4625 EASTOVER DRIVE
MESQUITE, TEXAS 75149

SURVEYOR	JTT
DATE	07/21/11
TECH	WSP
PARTY CHIEF	MJ
FIELD DATE	07/20/11
DRAWING FILE	F:\11-FILES\611\611-0755
MAPSCO #	525-R
SCALE	1" = 50'
JOB NUMBER	611-0755
SHEET	1 OF 1 SHEETS

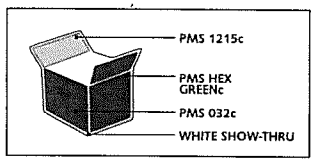

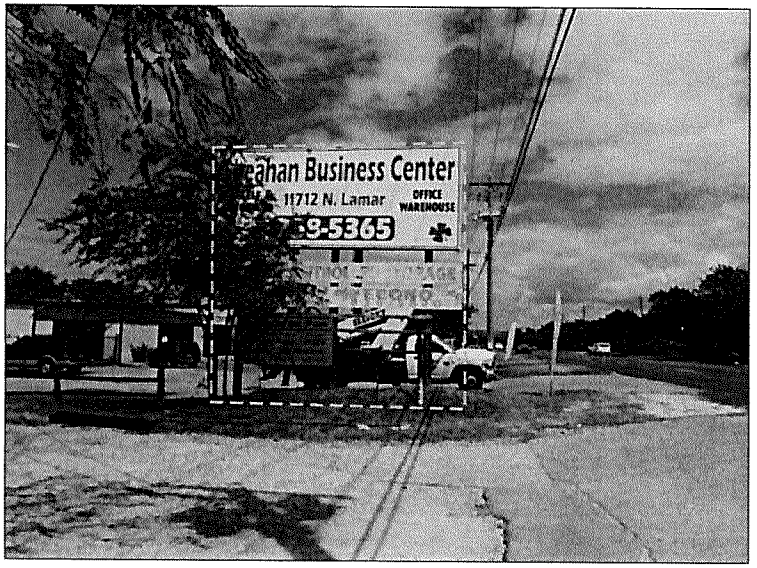

EXISTING ELEVATION

NOT TO SCALE

REMOVE & DISCARD ENTIRE D/F PYLON STRUCTURE - REPLACE w/ NEW D/F PYLON SIGN

D/F PYLON SIGN

SCALE: 1/4"=1'-0"

(1) REQUIRED - MANUFACTURE & INSTALL

D/F ALUMINUM FABRICATED PYLON SIGN CABINET - 18" DEEP -
TOP - CABINET PAINTED PMS 661c BLUE - 3M PAN III FLEXIBLE FACES w/ 1st SURFACE VINYL GRAPHICS -
INTERNALLY ILLUMINATED w/ 800mA H.O. FLUORESCENT LAMPS -
LOWER - WATCHFIRE FULL COLOR ELECTRONIC MESSAGE CENTER 19MM
w/ ADDED ALUMINUM FILLER
SUPPORTS TO BE 10" SQUARE TUBES PAINTED PMS 661c BLUE -
SET INTO CONCRETE PIER STYLE FOUNDATIONS AS REQ'D. PER SITE CONDITIONS

Design #
0384776Ar7
Sheet 4 of 4

Client
WATSON & TAYLOR

Address
11712 N. LAMAR
AUSTIN, TEXAS

Account Rep. N. FOWLKES
Designer CJR
Date 09/24/15

Approval / Date
Client
Sales
Estimating
Art
Engineering
Landlord

Revision / Date
R1 ES 10/2 C-emc cab
R2 JP/10.6.15/revised A & C
R3 KMc 10/8/15: add options
R4 KMc 10/13/15: rev phone #
R5 ES 10/13 lcss opts, add"units"
R6 SDM 10/19/15 revised "C"
R7 ES 10/20 new emc dimensions

Chandler Signs
Brand Images Begins Here
chandlersigns.com

National Headquarters	2701 Manor Way Dallas, TX 75235 214-892-2600 Fax 214-892-2944
San Antonio	12219 San Pedro Ave. Ste. #200 San Antonio, TX 78216 210-349-2000 Fax 210-349-8721
West Coast	7335 Fair Oaks Blvd. Unit C Vista, CA 92083 760-967-7000 Fax 760-967-7323
Northeast US	345 Boston Avenue Suite 230 Longmont, CO 80501 303-678-1075 Fax 303-412-0812
Florida	3581 Land Hill Road Circle Davenport, FL 33837 863-420-1190 Fax 863-424-1190
Georgia	37 Hawthorne Park Court Dawsonville, GA 30534 678-765-6952 Fax 678-343-8724
South Texas	PO Box 115, 709 Laurel Drive Portland, TX 78374 361-563-0569 Fax 361-643-6239

This drawing is the property of Chandler Signs, L.P., L.L.P. All rights to its use for reproduction are reserved by Chandler Signs, L.P., L.L.P.

FINAL ELECTRICAL CONNECTION BY CUSTOMER

THIS SIGN IS INTENDED TO BE INSTALLED IN ACCORDANCE WITH ARTICLE 600 OF THE NATIONAL ELECTRICAL CODE AND OTHER APPLICABLE ELECTRICAL CODES. THIS INCLUDES PROPER GROUNDING & BONDING OF THE SIGN. SIGN WILL BEAR UL LABEL(S).

5/8

SULLAWAY ENGINEERING
10815 RANCHO BERNARDO RD., SUITE 260, SAN DIEGO, CA 92127
PROJECTMANAGER@SULLAWAYENG.COM
PHONE: 1-858-312-5150 FAX: 1-858-777-3534

PROJECT:	WATSON & TAYLOR, 11712 N LAMAR BLVD STE 1, AUSTIN, TX	DATE:	10/26/2015
PROJECT #:	9788	ENGINEER:	KC
CLIENT:	CHANDLER SIGNS	PAGES:	

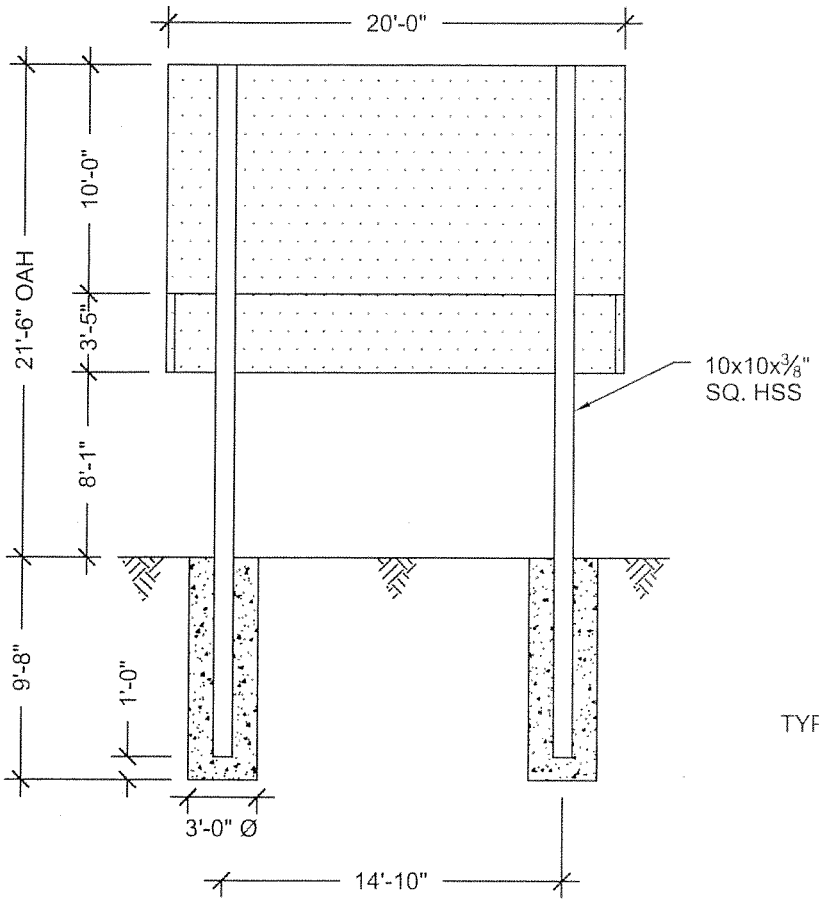

1 FRONT ELEVATION

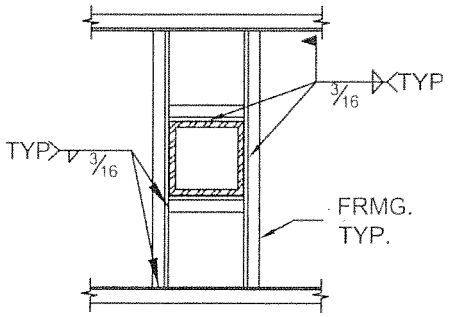

2 SADDLE DETAIL, TYP.

GENERAL NOTES

1. DESIGN CODE: IBC 2012
2. DESIGN LOADS: ASCE 7-10
3. WIND VELOCITY 115 MPH EXPOSURE C
4. SQ. HSS STEEL ASTM A500 GR. B, Fy = 46 KSI MIN.
5. CONCRETE 2500 PSI MIN.
6. PROVIDE 3" MIN. CLEAR COVER ON ALL STEEL EMBEDDED IN CONCRETE
7. PROVIDE PROTECTION AGAINST DISSIMILAR METALS
8. LATERAL SOIL BEARING PER IBC CLASS 4 (150 PSF/FT)

STATE OF TEXAS
MICHAEL F. SULLAWAY
105754
LICENSED
PROFESSIONAL ENGINEER

SULLAWAY ENGINEERING
10815 Rancho Bernardo RD., SD, CA 92127
projectmanager@sullawayeng.com
Phone: 858-312-5150 Fax: 858-777-3534

D8

PROJECT: WATSON & TAYLOR, AUSTIN, TX — DATE: 10/27/15
PROJ. NO.: 9788 — ENGINEER: KC
CLIENT: CHANDLER SIGNS

V2.9 building code; IBC 2012 — units; pounds, feet unless noted otherwise

Applied Wind Loads; from ASCE 7-10

$F=q_z*G*C_f*A_f$ with $q_z = 0.00256K_zK_{zt}K_dV^2$ (29.3.2 & 29.4)

C_f= 1.717 (Fig. 29.4-1) — max. height= 21.5

K_{zt}= 1.0 (26.8.2) (=1.0 unless unusual landscape)

K_z= from table 28.3-1 — Exposure= c

K_d= 0.85 for signs (table 26.6-1)

V= 115 mph

G= 0.85 (26.9) — weight= 2.818 kips

s/h= 0.465 — M_{DL}= 0.00 k-ft

B/s= 2.00

Pole Loads	structure component	height at section c.g.	K_z	q_z	pressure q_z*G*C_f	A_f	shear	Wind Moment M_W
	1	4.0416667	0.85	24.46	35.71	13.5	481	1944
	2	9.7916667	0.85	24.46	35.71	68.3	2440	23893
	3	13.25	0.85	24.46	35.71	70.0	2500	33120
	4	17.5	0.88	25.21	36.80	100.0	3680	64402
	5	20.75	0.91	26.08	38.08	30.0	1142	23704
					sums:	281.8	10243	147.06 (M_w) k-ft
	two pole distribution factor (asce fig. 29.4-1):				x 0.77		7884	113.19

arm= 14.4

P_u= 3.38 kip — M= 113.19 k-ft — $M=sqrt(M_{DL}^2+M_w^2)$

$M_u=sqrt(1.2M_{DL}^2+1.6M_W^2)$ = 113.19 k-ft

Pole Design — section; tube

$M_u \geq \phi M_n$ with $M_n = f_yZ$ — f_y= 46 ksi — ϕ= 0.9

H	M_u(k-ft)	Z req'd. (in)	Size(in)	t (in)	Z	USE
at grade	113.2	32.81	10	0.349	47.20	**10x10x3/8", ϕMn = 163 k-ft**

Footing Design — footprint: round

ω= 1.3 (IBC 1605.3.2) — IBC Table 1806.2, sections 1806.3.4, 1807.3.2

P= 6.15 kip — S1 = S x d / 3 — A = 2.34 x P / (S1 x b) — S= 400

S1= 1293 — d =0.5xA (1+ (1+4.36x h/A) ^.5) — IBC 1807.3.2.1

A= 3.71

footing: **3' - 0" dia.**
9' - 8" deep