Amendment No. 2
to
Contract No. GA170000022
for
Buckets and Lids
between
Illing Company, Inc.
and the
City of Austin

1.0 The City hereby exercises an early extension option for the above-referenced contract. Effective July 10,2018 to July 09, 2019. No options will remain.

2.0 The total Contract amount is increased by $40,491.00 for the extension option period. The total Contract authorization is recapped below:

Term	Action Amount	Total Contract Amount
Basic Term: 03/24/17 – 03/23/18	$40,491.00	$40,491.00
Amendment No. 1: Option 1 03/24/18 – 03/23/19	$40,491.00	$80,982.00
Amendment No. 2: Option 2 07/10/18 – 07/09/19	$40,491.00	$121,473.00

3.0 MBE/WBE goals were not established for this contract.

4.0 By signing this Amendment, the Contractor certifies that the Contractor and its principals are not currently suspended or debarred from doing business with the Federal Government, as indicated by the General Services Administration (GSA) List of Parties Excluded from Federal Procurement and Non-Procurement Programs, the State of Texas, or the City of Austin.

5.0 All other terms and conditions remain the same.

BY THE SIGNATURES affixed below, this Amendment is hereby incorporated into and made a part of the above-referenced contract.

Signature & Date: 7-6-18

Printed Name:
Authorized Representative

Signature & Date: Beatrice Washington 7-6-18

Beatrice Washington, Contract Management Specialist III
City of Austin
Purchasing Office

Illing Company, Inc.
N114 W18937 Clinton Drive
Germantown, WI, 53022

Amendment No. 1
to
Contract No. GA170000022
for
Buckets and Lids
between
Illing Company, Inc.
and the
City of Austin

1.0 The City hereby exercises the extension option for the above-referenced contract. Effective March 24, 2018 to March 23, 2019. One option remains.

2.0 The total Contract amount is increased by $40,491.00 for the extension option period. The total Contract authorization is recapped below:

Term	Action Amount	Total Contract Amount
Basic Term: 03/24/17 – 03/23/18	$40,491.00	$40,491.00
Amendment No. 1: Option 1 03/24/18 – 03/23/19	$40,491.00	$80,982.00

3.0 MBE/WBE goals were not established for this contract.

4.0 By signing this Amendment, the Contractor certifies that the Contractor and its principals are not currently suspended or debarred from doing business with the Federal Government, as indicated by the General Services Administration (GSA) List of Parties Excluded from Federal Procurement and Non-Procurement Programs, the State of Texas, or the City of Austin.

5.0 All other terms and conditions remain the same.

BY THE SIGNATURES affixed below, this Amendment is hereby incorporated into and made a part of the above-referenced contract.

Signature & Date: 2/19/2018
Printed Name: A.J. MORGAN
Authorized Representative

Signature & Date: 3-6-18
Cindy Reyes, Contract Management Specialist III
City of Austin
Purchasing Office

Illing Company, Inc.
N114 W18937 Clinton Drive
Germantown, WI, 53022

City of Austin

Purchasing Office, Financial Services Department
P.O. Box 1088, Austin, TX 78767

March 22, 2017

Illing Company, Inc.
AJ Morgan
Sales Representative
N114 W18937 Clinton Drive
Germantown, WI, 53022
amartin@illingcompany.com

Dear Mr. Martin:

The City of Austin approved the execution of a contract with your company for Buckets and Lids for Austin Resource Recovery in accordance with the referenced solicitation.

Responsible Department:	Austin Resource Recovery
Department Contact Person:	Carole Reynolds
Department Contact Email Address:	Carol.reynolds@austintexas.gov
Department Contact Telephone:	512-974-1816
Project Name:	Buckets and Lids
Contractor Name:	Illing Company Inc.
Contract Number:	MA GA170000022
Contract Period:	March 24, 2017 – March 23, 2018
Dollar Amount	$40,491.00
Extension Options:	Two (2) Twelve (12) month extension options
Extension Dollar Amount	$40,491.00
Requisition Number:	RQM 1500 17022700311
Solicitation Type & Number:	RFQ ISR0416
Agenda Item Number:	N/A
Council Approval Date:	N/A

Thank you for your interest in doing business with the City of Austin. If you have any questions regarding this contract, please contact the person referenced under Department Contact Person.

Sincerely,

Irene Sanchez-Rocha
Senior Buyer
City of Austin
Purchasing Office

cc: Carole Reynolds, Austin Resource Recovery

CONTRACT BETWEEN THE CITY OF AUSTIN ("City")
AND
ILLING COMPANY INC ("Contractor")
for
Buckets and Lids for Reblended Paint Program
MA GA170000022

The City accepts the Contractor's Offer (as referenced in Section 1.1.3 below) for the above requirement and enters into the following Contract.

This Contract is between Illing Company Inc having offices at Germantown, WI, 53022 and the City, a home-rule municipality incorporated by the State of Texas, and is effective as of the date executed by the City ("Effective Date").

Capitalized terms used but not defined herein have the meanings given them in Solicitation Number RFQ ISR0416.

1.1 **This Contract is composed of the following documents:**

1.1.1 This Contract

1.1.2 The City's Solicitation, Request for Quotation (RFQ), ISR0416 including all documents incorporated by reference

1.1.3 Illing Company Inc. Offer, dated 3/3/2017, including subsequent clarifications

1.2 **Order of Precedence.** Any inconsistency or conflict in the Contract documents shall be resolved by giving precedence in the following order:

1.2.1 This Contract

1.2.2 The City's Solicitation as referenced in Section 1.1.2, including all documents incorporated by reference

1.2.3 The Contractor's Offer as referenced in Section 1.1.3, including subsequent clarifications.

1.3 **Term of Contract.** The Contract will be in effect for an initial term of twelve (12) months and may be extended thereafter for up to two (2) twelve (12) month extension option(s), subject to the approval of the Contractor and the City Purchasing Officer or his designee. See the Term of Contract provision in Section 0400 for additional Contract requirements.

1.4 **Compensation.** The Contractor shall be paid a total Not-to-Exceed amount of $40,491.00 for the initial Contract term and $40,491.00 for each extension option as indicated in the Bid Sheet, IFB Section 0600. Payment shall be made upon successful completion of services or delivery of goods as outlined in each individual Delivery Order.

1.5 **Quantity of Work.** There is no guaranteed quantity of work for the period of the Contract and there are no minimum order quantities. Work will be on an as needed basis as specified by the City for each Delivery Order

1.6 **Clarifications and Additional Agreements.** The following are incorporated into the Contract.

1.6.1 N/A

This Contract (including any Exhibits) constitutes the entire agreement of the parties regarding the subject matter of this Contract and supersedes all prior and contemporaneous agreements and understandings, whether written or oral, relating to such subject matter. This Contract may be altered, amended, or modified only by a written instrument signed by the duly authorized representatives of both parties.

In witness whereof, the parties have caused a duly authorized representative to execute this Contract on the date set forth below.

ILLING COMPANY INC	**CITY OF AUSTIN**
A.J. MORGAN	Irene Sanchez-Rocha
Printed Name of Authorized Person	Printed Name of Authorized Person
Signature	Signature
SALES REP	Senior Buyer
Title:	Title:
3/20/2017	3/22/17
Date:	Date:

CITY OF AUSTIN, TEXAS

Purchasing Office

REQUEST FOR QUOTATION (RFQ)

OFFER SHEET

SOLICITATION NO: ISR0416

DATE ISSUED: 02/28/17

REQUISITION NO.: 1500 17022700311

COMMODITY CODE: 45018

FOR CONTRACTUAL AND TECHNICAL ISSUES CONTACT THE FOLLOWING:

Irene Sanchez-Rocha
Senior Buyer

Phone: (512) 974-2554
E-Mail: Irene.sanchez-rocha@austintexas.gov

COMMODITY/SERVICE DESCRIPTION: Buckets and Lids

PRE-RESPONSE CONFERENCE TIME AND DATE: N/A

LOCATION: N/A

QUOTE DUE PRIOR TO: March 7, 2017 @ 3:00 p.m.

SUBMIT YOUR QUOTE VIA E-MAIL OR FAX TO:
E-MAIL: Irene.sanchez-rocha@austintexas.gov
Fax : (512) 974-2388

The Vendor agrees, if this Offer is accepted within 90 calendar days after the Due Date, to fully comply in strict accordance with the Solicitation, specifications and provisions attached thereto for the amounts shown on the accompanying Offer.

*****SIGNATURE FOR SUBMITTAL REQUIRED ON PAGE 3 OF THIS DOCUMENT*****

This solicitation is comprised of the following required sections. Please ensure to carefully read each section including those incorporated by reference. By signing this document, you are agreeing to all the items contained herein and will be bound to all terms.

SECTION NO.	TITLE	PAGES
0100	STANDARD PURCHASE DEFINITIONS	*
0200	STANDARD SOLICITATION INSTRUCTIONS	*
0300	STANDARD PURCHASE TERMS AND CONDITIONS	*
0400	SUPPLEMENTAL PURCHASE PROVISIONS	6
0500	SPECIFICATION	1
0600	QUOTE SHEET – Must be completed and submitted with Offer	1
0700	REFERENCE SHEET – Complete and submit if required	2
0800	NON-DISCRIMINATION CERTIFICATION AND NON-RETALIATION CERTFICATION	2
0805	NON-SUSPENSION OR DEBARMENT CERTIFICATION	*
0835	NONRESIDENT BIDDER PROVISIONS – Complete and submit	1

*** Documents are hereby incorporated into this Solicitation by reference, with the same force and effect as if they were incorporated in full text. The full text versions of these Sections are available, on the Internet at the following online address:**

http://www.austintexas.gov/financeonline/vendor_connection/index.cfm#STANDARDBIDDOCUMENTS

If you do not have access to the Internet, you may obtain a copy of these Sections from the City of Austin Purchasing Office located in the Municipal Building, 124 West 8th Street, Room #308 Austin, Texas 78701; phone (512) 974-2500. Please have the Solicitation number available so that the staff can select the proper documents. These documents can be mailed, expressed mailed, or faxed to you.

The undersigned, by his/her signature, represents that he/she is submitting a binding offer and is authorized to bind the respondent to fully comply with the solicitation document contained herein. The Respondent, by submitting and signing below, acknowledges that he/she has received and read the entire document packet sections defined above including all documents incorporated by reference, and agrees to be bound by the terms therein.

Company Name: ILLING COMPANY, INC.

Company Address: N114 W18937 CLINTON DRIVE

City, State, Zip: GERMANTOWN, WI 53022

Federal Tax ID No. [redacted]

Printed Name of Officer or Authorized Representative: A.J. MORGAN

Title: SALES REPRESENTATIVE

Signature of Officer or Authorized Representative: AJ Morgan

Date: 3-3-2017

Email Address: ajmorgan@illingcompany.com

Phone Number: 262-253-4241

*** Completed Bid Sheet, section 0600 must be submitted with this Offer Sheet to be considered for award**

CITY OF AUSTIN
PURCHASING OFFICE
STANDARD PURCHASE TERMS AND CONDITIONS

By submitting an Offer in response to the Solicitation, the Contractor agrees that the Contract shall be governed by the following terms and conditions. Unless otherwise specified in the Contract, Sections 3, 4, 5, 6, 7, 8, 20, 21, and 36 shall apply only to a Solicitation to purchase Goods, and Sections 9, 10, 11 and 22 shall apply only to a Solicitation to purchase Services to be performed principally at the City's premises or on public rights-of-way.

1. **CONTRACTOR'S OBLIGATIONS**. The Contractor shall fully and timely provide all Deliverables described in the Solicitation and in the Contractor's Offer in strict accordance with the terms, covenants, and conditions of the Contract and all applicable Federal, State, and local laws, rules, and regulations.

2. **EFFECTIVE DATE/TERM**. Unless otherwise specified in the Solicitation, this Contract shall be effective as of the date the contract is signed by the City, and shall continue in effect until all obligations are performed in accordance with the Contract.

3. **CONTRACTOR TO PACKAGE DELIVERABLES**: The Contractor will package Deliverables in accordance with good commercial practice and shall include a packing list showing the description of each item, the quantity and unit price Unless otherwise provided in the Specifications or Supplemental Terms and Conditions, each shipping container shall be clearly and permanently marked as follows: (a) The Contractor's name and address, (b) the City's name, address and purchase order or purchase release number and the price agreement number if applicable, (c) Container number and total number of containers, e.g. box 1 of 4 boxes, and (d) the number of the container bearing the packing list. The Contractor shall bear cost of packaging. Deliverables shall be suitably packed to secure lowest transportation costs and to conform with requirements of common carriers and any applicable specifications. The City's count or weight shall be final and conclusive on shipments not accompanied by packing lists.

4. **SHIPMENT UNDER RESERVATION PROHIBITED**: The Contractor is not authorized to ship the Deliverables under reservation and no tender of a bill of lading will operate as a tender of Deliverables.

5. **TITLE & RISK OF LOSS**: Title to and risk of loss of the Deliverables shall pass to the City only when the City actually receives and accepts the Deliverables.

6. **DELIVERY TERMS AND TRANSPORTATION CHARGES**: Deliverables shall be shipped F.O.B. point of delivery unless otherwise specified in the Supplemental Terms and Conditions. Unless otherwise stated in the Offer, the Contractor's price shall be deemed to include all delivery and transportation charges. The City shall have the right to designate what method of transportation shall be used to ship the Deliverables. The place of delivery shall be that set forth in the block of the purchase order or purchase release entitled "Receiving Agency".

7. **RIGHT OF INSPECTION AND REJECTION**: The City expressly reserves all rights under law, including, but not limited to the Uniform Commercial Code, to inspect the Deliverables at delivery before accepting them, and to reject defective or non-conforming Deliverables. If the City has the right to inspect the Contractor's, or the Contractor's Subcontractor's, facilities, or the Deliverables at the Contractor's, or the Contractor's Subcontractor's, premises, the Contractor shall furnish, or cause to be furnished, without additional charge, all reasonable facilities and assistance to the City to facilitate such inspection.

8. **NO REPLACEMENT OF DEFECTIVE TENDER**: Every tender or delivery of Deliverables must fully comply with all provisions of the Contract as to time of delivery, quality, and quantity. Any non-complying tender shall constitute a breach and the Contractor shall not have the right to substitute a conforming tender; provided, where the time for performance has not yet expired, the Contractor may notify the City of the intention to cure and may then make a conforming tender within the time allotted in the contract.

9. **PLACE AND CONDITION OF WORK**: The City shall provide the Contractor access to the sites where the Contractor is to perform the services as required in order for the Contractor to perform the services in a timely and efficient manner, in accordance with and subject to the applicable security laws, rules, and regulations. The Contractor acknowledges that it has satisfied itself as to the nature of the City's service requirements and specifications, the location and essential characteristics of the work sites, the quality and quantity of materials, equipment, labor and facilities necessary to perform the services, and any other condition or state of fact which could in any way affect performance of the Contractor's obligations under the contract. The Contractor hereby releases and holds the City

harmless from and against any liability or claim for damages of any kind or nature if the actual site or service conditions differ from expected conditions.

10. **WORKFORCE**

A. The Contractor shall employ only orderly and competent workers, skilled in the performance of the services which they will perform under the Contract.

B. The Contractor, its employees, subcontractors, and subcontractor's employees may not while engaged in participating or responding to a solicitation or while in the course and scope of delivering goods or services under a City of Austin contract or on the City's property .

i. use or possess a firearm, including a concealed handgun that is licensed under state law, except as required by the terms of the contract; or
ii. use or possess alcoholic or other intoxicating beverages, illegal drugs or controlled substances, nor may such workers be intoxicated, or under the influence of alcohol or drugs, on the job.

C. If the City or the City's representative notifies the Contractor that any worker is incompetent, disorderly or disobedient, has knowingly or repeatedly violated safety regulations, has possessed any firearms, or has possessed or was under the influence of alcohol or drugs on the job, the Contractor shall immediately remove such worker from Contract services, and may not employ such worker again on Contract services without the City's prior written consent.

11. **COMPLIANCE WITH HEALTH, SAFETY, AND ENVIRONMENTAL REGULATIONS**: The Contractor, its Subcontractors, and their respective employees, shall comply fully with all applicable federal, state, and local health, safety, and environmental laws, ordinances, rules and regulations in the performance of the services, including but not limited to those promulgated by the City and by the Occupational Safety and Health Administration (OSHA). In case of conflict, the most stringent safety requirement shall govern. The Contractor shall indemnify and hold the City harmless from and against all claims, demands, suits, actions, judgments, fines, penalties and liability of every kind arising from the breach of the Contractor’s obligations under this paragraph.

12. **INVOICES**:

A. The Contractor shall submit separate invoices in duplicate on each purchase order or purchase release after each delivery. If partial shipments or deliveries are authorized by the City, a separate invoice must be sent for each shipment or delivery made.

B. **Proper Invoices must include a unique invoice number, the purchase order or delivery order number and the master agreement number if applicable, the Department’s Name, and the name of the point of contact for the Department**. Invoices shall be itemized and transportation charges, if any, shall be listed separately. A copy of the bill of lading and the freight waybill, when applicable, shall be attached to the invoice. The Contractor’s name and, if applicable, the tax identification number on the invoice must exactly match the information in the Vendor’s registration with the City. Unless otherwise instructed in writing, the City may rely on the remittance address specified on the Contractor’s invoice.

C. Invoices for labor shall include a copy of all time-sheets with trade labor rate and Deliverables order number clearly identified. Invoices shall also include a tabulation of work-hours at the appropriate rates and grouped by work order number. Time billed for labor shall be limited to hours actually worked at the work site.

D. Unless otherwise expressly authorized in the Contract, the Contractor shall pass through all Subcontract and other authorized expenses at actual cost without markup.

E. Federal excise taxes, State taxes, or City sales taxes must not be included in the invoiced amount. The City will furnish a tax exemption certificate upon request.

13. **PAYMENT**:

A. All proper invoices received by the City will be paid within thirty (30) calendar days of the City's receipt of the Deliverables or of the invoice, whichever is later.

B. **If payment is not timely made, (per paragraph A), interest shall accrue on the unpaid balance at the lesser of the rate specified in Texas Government Code Section 2251.025 or the maximum lawful rate; except, if payment is not timely made for a reason for which the City may withhold payment hereunder, interest shall not accrue until ten (10) calendar days after the grounds for withholding payment have been resolved.**

C. If partial shipments or deliveries are authorized by the City, the Contractor will be paid for the partial shipment or delivery, as stated above, provided that the invoice matches the shipment or delivery.

D. The City may withhold or set off the entire payment or part of any payment otherwise due the Contractor to such extent as may be necessary on account of:

i. delivery of defective or non-conforming Deliverables by the Contractor;
ii. third party claims, which are not covered by the insurance which the Contractor is required to provide, are filed or reasonable evidence indicating probable filing of such claims;
iii. failure of the Contractor to pay Subcontractors, or for labor, materials or equipment;
iv. damage to the property of the City or the City's agents, employees or contractors, which is not covered by insurance required to be provided by the Contractor;
v. reasonable evidence that the Contractor's obligations will not be completed within the time specified in the Contract, and that the unpaid balance would not be adequate to cover actual or liquidated damages for the anticipated delay;
vi. failure of the Contractor to submit proper invoices with all required attachments and supporting documentation; or
vii. failure of the Contractor to comply with any material provision of the Contract Documents.

E. Notice is hereby given of Article VIII, Section 1 of the Austin City Charter which prohibits the payment of any money to any person, firm or corporation who is in arrears to the City for taxes, and of §2-8-3 of the Austin City Code concerning the right of the City to offset indebtedness owed the City.

F. Payment will be made by check unless the parties mutually agree to payment by credit card or electronic transfer of funds. The Contractor agrees that there shall be no additional charges, surcharges, or penalties to the City for payments made by credit card or electronic funds transfer.

G. The awarding or continuation of this contract is dependent upon the availability of funding. The City's payment obligations are payable only and solely from funds Appropriated and available for this contract. The absence of Appropriated or other lawfully available funds shall render the Contract null and void to the extent funds are not Appropriated or available and any Deliverables delivered but unpaid shall be returned to the Contractor. The City shall provide the Contractor written notice of the failure of the City to make an adequate Appropriation for any fiscal year to pay the amounts due under the Contract, or the reduction of any Appropriation to an amount insufficient to permit the City to pay its obligations under the Contract. In the event of non or inadequate appropriation of funds, there will be no penalty nor removal fees charged to the City.

14. **TRAVEL EXPENSES**: All travel, lodging and per diem expenses in connection with the Contract for which reimbursement may be claimed by the Contractor under the terms of the Solicitation will be reviewed against the City's Travel Policy as published and maintained by the City's Controller's Office and the Current United States General Services Administration Domestic Per Diem Rates (the "Rates") as published and maintained on the Internet at:

http://www.gsa.gov/portal/category/21287

No amounts in excess of the Travel Policy or Rates shall be paid. All invoices must be accompanied by copies of detailed itemized receipts (e.g. hotel bills, airline tickets). No reimbursement will be made for expenses not actually incurred. Airline fares in excess of coach or economy will not be reimbursed. Mileage charges may not exceed the amount permitted as a deduction in any year under the Internal Revenue Code or Regulations.

15. **FINAL PAYMENT AND CLOSE-OUT**:

A. If an MBE/WBE Program Compliance Plan is required by the Solicitation, and the Contractor has identified Subcontractors, the Contractor is required to submit a Contract Close-Out MBE/WBE Compliance Report to the Project manager or Contract manager no later than the 15th calendar day after completion of all work under the contract. Final payment, retainage, or both may be withheld if the Contractor is not in compliance with the requirements of the Compliance Plan as accepted by the City.

B. The making and acceptance of final payment will constitute:

i. a waiver of all claims by the City against the Contractor, except claims (1) which have been previously asserted in writing and not yet settled, (2) arising from defective work appearing after final inspection, (3) arising from failure of the Contractor to comply with the Contract or the terms of any warranty specified herein, (4) arising from the Contractor's continuing obligations under the Contract, including but not limited to indemnity and warranty obligations, or (5) arising under the City's right to audit; and

ii. a waiver of all claims by the Contractor against the City other than those previously asserted in writing and not yet settled.

16. **SPECIAL TOOLS & TEST EQUIPMENT**: If the price stated on the Offer includes the cost of any special tooling or special test equipment fabricated or required by the Contractor for the purpose of filling this order, such special tooling equipment and any process sheets related thereto shall become the property of the City and shall be identified by the Contractor as such.

17. **AUDITS and RECORDS**:

A. The Contractor agrees that the representatives of the Office of the City Auditor or other authorized representatives of the City shall have access to, and the right to audit, examine, or reproduce, any and all records of the Contractor related to the performance under this Contract. The Contractor shall retain all such records for a period of three (3) years after final payment on this Contract or until all audit and litigation matters that the City has brought to the attention of the Contractor are resolved, whichever is longer. The Contractor agrees to refund to the City any overpayments disclosed by any such audit.

B. Records Retention:

i. Contractor is subject to City Code chapter 2-11 (Records Management), and as it may subsequently be amended. For purposes of this subsection, a Record means all books, accounts, reports, files, and other data recorded or created by a Contractor in fulfillment of the Contract whether in digital or physical format, except a record specifically relating to the Contractor's internal administration.

ii. All Records are the property of the City. The Contractor may not dispose of or destroy a Record without City authorization and shall deliver the Records, in all requested formats and media, along with all finding aids and metadata, to the City at no cost when requested by the City

iii. The Contractor shall retain all Records for a period of three (3) years after final payment on this Contract or until all audit and litigation matters that the City has brought to the attention of the Contractor are resolved, whichever is longer.

C. The Contractor shall include sections A and B above in all subcontractor agreements entered into in connection with this Contract.

18. **SUBCONTRACTORS**:

A. If the Contractor identified Subcontractors in an MBE/WBE Program Compliance Plan or a No Goals Utilization Plan the Contractor shall comply with the provisions of Chapters 2-9A, 2-9B, 2-9C, and 2-9D, as applicable, of the Austin City Code and the terms of the Compliance Plan or Utilization Plan as approved by the City (the "Plan"). The Contractor shall not initially employ any Subcontractor except as provided in the Contractor's Plan. The Contractor shall not substitute any Subcontractor identified in the Plan, unless the substitute has been accepted by the City in writing in accordance with the provisions of Chapters 2-9A, 2-9B, 2-9C and 2-9D, as applicable. No acceptance by the City of any Subcontractor shall constitute a waiver of any rights or remedies of the City with respect to defective Deliverables provided by a Subcontractor. If a Plan has been approved, the Contractor is additionally required to submit a monthly Subcontract Awards and Expenditures Report to the Contract Manager and the Purchasing Office Contract Compliance Manager no later than the tenth calendar day of each month.

B. Work performed for the Contractor by a Subcontractor shall be pursuant to a written contract between the Contractor and Subcontractor. The terms of the subcontract may not conflict with the terms of the Contract, and shall contain provisions that:

i. require that all Deliverables to be provided by the Subcontractor be provided in strict accordance with the provisions, specifications and terms of the Contract;
ii. prohibit the Subcontractor from further subcontracting any portion of the Contract without the prior written consent of the City and the Contractor. The City may require, as a condition to such further subcontracting, that the Subcontractor post a payment bond in form, substance and amount acceptable to the City;
iii. require Subcontractors to submit all invoices and applications for payments, including any claims for additional payments, damages or otherwise, to the Contractor in sufficient time to enable the Contractor to include same with its invoice or application for payment to the City in accordance with the terms of the Contract;
iv. require that all Subcontractors obtain and maintain, throughout the term of their contract, insurance in the type and amounts specified for the Contractor, with the City being a named insured as its interest shall appear; and
v. require that the Subcontractor indemnify and hold the City harmless to the same extent as the Contractor is required to indemnify the City.

C. The Contractor shall be fully responsible to the City for all acts and omissions of the Subcontractors just as the Contractor is responsible for the Contractor's own acts and omissions. Nothing in the Contract shall create for the benefit of any such Subcontractor any contractual relationship between the City and any such Subcontractor, nor shall it create any obligation on the part of the City to pay or to see to the payment of any moneys due any such Subcontractor except as may otherwise be required by law.

D. The Contractor shall pay each Subcontractor its appropriate share of payments made to the Contractor not later than ten (10) calendar days after receipt of payment from the City.

19. **WARRANTY-PRICE**:

A. The Contractor warrants the prices quoted in the Offer are no higher than the Contractor's current prices on orders by others for like Deliverables under similar terms of purchase.

B. The Contractor certifies that the prices in the Offer have been arrived at independently without consultation, communication, or agreement for the purpose of restricting competition, as to any matter relating to such fees with any other firm or with any competitor.

C. In addition to any other remedy available, the City may deduct from any amounts owed to the Contractor, or otherwise recover, any amounts paid for items in excess of the Contractor's current prices on orders by others for like Deliverables under similar terms of purchase.

20. **WARRANTY – TITLE**: The Contractor warrants that it has good and indefeasible title to all Deliverables furnished under the Contract, and that the Deliverables are free and clear of all liens, claims, security interests and encumbrances. The Contractor shall indemnify and hold the City harmless from and against all adverse title claims to the Deliverables.

21. **WARRANTY – DELIVERABLES**: The Contractor warrants and represents that all Deliverables sold the City under the Contract shall be free from defects in design, workmanship or manufacture, and conform in all material respects to the specifications, drawings, and descriptions in the Solicitation, to any samples furnished by the Contractor, to the terms, covenants and conditions of the Contract, and to all applicable State, Federal or local laws, rules, and regulations, and industry codes and standards. Unless otherwise stated in the Solicitation, the Deliverables shall be new or recycled merchandise, and not used or reconditioned.

    A. Recycled Deliverables shall be clearly identified as such.

    B. The Contractor may not limit, exclude or disclaim the foregoing warranty or any warranty implied by law; and any attempt to do so shall be without force or effect.

    C. Unless otherwise specified in the Contract, the warranty period shall be at least one year from the date of acceptance of the Deliverables or from the date of acceptance of any replacement Deliverables. If during the warranty period, one or more of the above warranties are breached, the Contractor shall promptly upon receipt of demand either repair the non-conforming Deliverables, or replace the non-conforming Deliverables with fully conforming Deliverables, at the City's option and at no additional cost to the City. All costs incidental to such repair or replacement, including but not limited to, any packaging and shipping costs, shall be borne exclusively by the Contractor. The City shall endeavor to give the Contractor written notice of the breach of warranty within thirty (30) calendar days of discovery of the breach of warranty, but failure to give timely notice shall not impair the City's rights under this section.

    D. If the Contractor is unable or unwilling to repair or replace defective or non-conforming Deliverables as required by the City, then in addition to any other available remedy, the City may reduce the quantity of Deliverables it may be required to purchase under the Contract from the Contractor, and purchase conforming Deliverables from other sources. In such event, the Contractor shall pay to the City upon demand the increased cost, if any, incurred by the City to procure such Deliverables from another source.

    E. If the Contractor is not the manufacturer, and the Deliverables are covered by a separate manufacturer's warranty, the Contractor shall transfer and assign such manufacturer's warranty to the City. If for any reason the manufacturer's warranty cannot be fully transferred to the City, the Contractor shall assist and cooperate with the City to the fullest extent to enforce such manufacturer's warranty for the benefit of the City.

22. **WARRANTY – SERVICES**: The Contractor warrants and represents that all services to be provided the City under the Contract will be fully and timely performed in a good and workmanlike manner in accordance with generally accepted industry standards and practices, the terms, conditions, and covenants of the Contract, and all applicable Federal, State and local laws, rules or regulations.

    A. The Contractor may not limit, exclude or disclaim the foregoing warranty or any warranty implied by law, and any attempt to do so shall be without force or effect.

    B. Unless otherwise specified in the Contract, the warranty period shall be <u>at least</u> one year from the Acceptance Date. If during the warranty period, one or more of the above warranties are breached, the Contractor shall promptly upon receipt of demand perform the services again in accordance with above standard at no additional cost to the City. All costs incidental to such additional performance shall be borne by the Contractor. The City shall endeavor to give the Contractor written notice of the breach of warranty within thirty (30) calendar days of discovery of the breach warranty, but failure to give timely notice shall not impair the City's rights under this section.

    C. If the Contractor is unable or unwilling to perform its services in accordance with the above standard as required by the City, then in addition to any other available remedy, the City may reduce the amount of services it may be

required to purchase under the Contract from the Contractor, and purchase conforming services from other sources. In such event, the Contractor shall pay to the City upon demand the increased cost, if any, incurred by the City to procure such services from another source.

23. **ACCEPTANCE OF INCOMPLETE OR NON-CONFORMING DELIVERABLES**: If, instead of requiring immediate correction or removal and replacement of defective or non-conforming Deliverables, the City prefers to accept it, the City may do so. The Contractor shall pay all claims, costs, losses and damages attributable to the City's evaluation of and determination to accept such defective or non-conforming Deliverables. If any such acceptance occurs prior to final payment, the City may deduct such amounts as are necessary to compensate the City for the diminished value of the defective or non-conforming Deliverables. If the acceptance occurs after final payment, such amount will be refunded to the City by the Contractor.

24. **RIGHT TO ASSURANCE**: Whenever one party to the Contract in good faith has reason to question the other party's intent to perform, demand may be made to the other party for written assurance of the intent to perform. In the event that no assurance is given within the time specified after demand is made, the demanding party may treat this failure as an anticipatory repudiation of the Contract.

25. **STOP WORK NOTICE**: The City may issue an immediate Stop Work Notice in the event the Contractor is observed performing in a manner that is in violation of Federal, State, or local guidelines, or in a manner that is determined by the City to be unsafe to either life or property. Upon notification, the Contractor will cease all work until notified by the City that the violation or unsafe condition has been corrected. The Contractor shall be liable for all costs incurred by the City as a result of the issuance of such Stop Work Notice.

26. **DEFAULT**: The Contractor shall be in default under the Contract if the Contractor (a) fails to fully, timely and faithfully perform any of its material obligations under the Contract, (b) fails to provide adequate assurance of performance under Paragraph 24, (c) becomes insolvent or seeks relief under the bankruptcy laws of the United States or (d) makes a material misrepresentation in Contractor's Offer, or in any report or deliverable required to be submitted by the Contractor to the City.

27. **TERMINATION FOR CAUSE:**. In the event of a default by the Contractor, the City shall have the right to terminate the Contract for cause, by written notice effective ten (10) calendar days, unless otherwise specified, after the date of such notice, unless the Contractor, within such ten (10) day period, cures such default, or provides evidence sufficient to prove to the City's reasonable satisfaction that such default does not, in fact, exist. The City may place Contractor on probation for a specified period of time within which the Contractor must correct any non-compliance issues. Probation shall not normally be for a period of more than nine (9) months, however, it may be for a longer period, not to exceed one (1) year depending on the circumstances. If the City determines the Contractor has failed to perform satisfactorily during the probation period, the City may proceed with suspension. In the event of a default by the Contractor, the City may suspend or debar the Contractor in accordance with the "City of Austin Purchasing Office Probation, Suspension and Debarment Rules for Vendors" and remove the Contractor from the City's vendor list for up to five (5) years and any Offer submitted by the Contractor may be disqualified for up to five (5) years. In addition to any other remedy available under law or in equity, the City shall be entitled to recover all actual damages, costs, losses and expenses, incurred by the City as a result of the Contractor's default, including, without limitation, cost of cover, reasonable attorneys' fees, court costs, and prejudgment and post-judgment interest at the maximum lawful rate. All rights and remedies under the Contract are cumulative and are not exclusive of any other right or remedy provided by law.

28. **TERMINATION WITHOUT CAUSE**: The City shall have the right to terminate the Contract, in whole or in part, without cause any time upon thirty (30) calendar days' prior written notice. Upon receipt of a notice of termination, the Contractor shall promptly cease all further work pursuant to the Contract, with such exceptions, if any, specified in the notice of termination. The City shall pay the Contractor, to the extent of funds Appropriated or otherwise legally available for such purposes, for all goods delivered and services performed and obligations incurred prior to the date of termination in accordance with the terms hereof.

29. **FRAUD**: Fraudulent statements by the Contractor on any Offer or in any report or deliverable required to be submitted by the Contractor to the City shall be grounds for the termination of the Contract for cause by the City and may result in legal action.

30. **DELAYS**:

A. The City may delay scheduled delivery or other due dates by written notice to the Contractor if the City deems it is in its best interest. If such delay causes an increase in the cost of the work under the Contract, the City and the Contractor shall negotiate an equitable adjustment for costs incurred by the Contractor in the Contract price and execute an amendment to the Contract. The Contractor must assert its right to an adjustment within thirty (30) calendar days from the date of receipt of the notice of delay. Failure to agree on any adjusted price shall be handled under the Dispute Resolution process specified in paragraph 48. However, nothing in this provision shall excuse the Contractor from delaying the delivery as notified.

B. Neither party shall be liable for any default or delay in the performance of its obligations under this Contract if, while and to the extent such default or delay is caused by acts of God, fire, riots, civil commotion, labor disruptions, sabotage, sovereign conduct, or any other cause beyond the reasonable control of such Party. In the event of default or delay in contract performance due to any of the foregoing causes, then the time for completion of the services will be extended; provided, however, in such an event, a conference will be held within three (3) business days to establish a mutually agreeable period of time reasonably necessary to overcome the effect of such failure to perform.

31. **INDEMNITY**:

A. Definitions:

i. "Indemnified Claims" shall include any and all claims, demands, suits, causes of action, judgments and liability of every character, type or description, including all reasonable costs and expenses of litigation, mediation or other alternate dispute resolution mechanism, including attorney and other professional fees for:
(1) damage to or loss of the property of any person (including, but not limited to the City, the Contractor, their respective agents, officers, employees and subcontractors; the officers, agents, and employees of such subcontractors; and third parties); and/or
(2) death, bodily injury, illness, disease, worker's compensation, loss of services, or loss of income or wages to any person (including but not limited to the agents, officers and employees of the City, the Contractor, the Contractor's subcontractors, and third parties),

ii. "Fault" shall include the sale of defective or non-conforming Deliverables, negligence, willful misconduct, or a breach of any legally imposed strict liability standard.

B. **THE CONTRACTOR SHALL DEFEND (AT THE OPTION OF THE CITY), INDEMNIFY, AND HOLD THE CITY, ITS SUCCESSORS, ASSIGNS, OFFICERS, EMPLOYEES AND ELECTED OFFICIALS HARMLESS FROM AND AGAINST ALL INDEMNIFIED CLAIMS DIRECTLY ARISING OUT OF, INCIDENT TO, CONCERNING OR RESULTING FROM THE FAULT OF THE CONTRACTOR, OR THE CONTRACTOR'S AGENTS, EMPLOYEES OR SUBCONTRACTORS, IN THE PERFORMANCE OF THE CONTRACTOR'S OBLIGATIONS UNDER THE CONTRACT. NOTHING HEREIN SHALL BE DEEMED TO LIMIT THE RIGHTS OF THE CITY OR THE CONTRACTOR (INCLUDING, BUT NOT LIMITED TO, THE RIGHT TO SEEK CONTRIBUTION) AGAINST ANY THIRD PARTY WHO MAY BE LIABLE FOR AN INDEMNIFIED CLAIM.**

32. **INSURANCE**: (reference Section 0400 for specific coverage requirements). The following insurance requirement applies. (Revised March 2013).

A. General Requirements.

i. The Contractor shall at a minimum carry insurance in the types and amounts indicated in Section 0400, Supplemental Purchase Provisions, for the duration of the Contract, including extension options and hold over periods, and during any warranty period.

ii. The Contractor shall provide Certificates of Insurance with the coverages and endorsements required in Section 0400, Supplemental Purchase Provisions, to the City as verification of coverage prior to contract execution and within fourteen (14) calendar days after written request from the

City. Failure to provide the required Certificate of Insurance may subject the Offer to disqualification from consideration for award. The Contractor must also forward a Certificate of Insurance to the City whenever a previously identified policy period has expired, or an extension option or hold over period is exercised, as verification of continuing coverage.

iii. The Contractor shall not commence work until the required insurance is obtained and until such insurance has been reviewed by the City. Approval of insurance by the City shall not relieve or decrease the liability of the Contractor hereunder and shall not be construed to be a limitation of liability on the part of the Contractor.

iv. The City may request that the Contractor submit certificates of insurance to the City for all subcontractors prior to the subcontractors commencing work on the project.

v. The Contractor's and all subcontractors' insurance coverage shall be written by companies licensed to do business in the State of Texas at the time the policies are issued and shall be written by companies with A.M. Best ratings of B+VII or better.

vi. The "other" insurance clause shall not apply to the City where the City is an additional insured shown on any policy. It is intended that policies required in the Contract, covering both the City and the Contractor, shall be considered primary coverage as applicable.

vii. If insurance policies are not written for amounts specified in Section 0400, Supplemental Purchase Provisions, the Contractor shall carry Umbrella or Excess Liability Insurance for any differences in amounts specified. If Excess Liability Insurance is provided, it shall follow the form of the primary coverage.

viii. The City shall be entitled, upon request, at an agreed upon location, and without expense, to review certified copies of policies and endorsements thereto and may make any reasonable requests for deletion or revision or modification of particular policy terms, conditions, limitations, or exclusions except where policy provisions are established by law or regulations binding upon either of the parties hereto or the underwriter on any such policies.

ix. The City reserves the right to review the insurance requirements set forth during the effective period of the Contract and to make reasonable adjustments to insurance coverage, limits, and exclusions when deemed necessary and prudent by the City based upon changes in statutory law, court decisions, the claims history of the industry or financial condition of the insurance company as well as the Contractor.

x. The Contractor shall not cause any insurance to be canceled nor permit any insurance to lapse during the term of the Contract or as required in the Contract.

xi. The Contractor shall be responsible for premiums, deductibles and self-insured retentions, if any, stated in policies. Self-insured retentions shall be disclosed on the Certificate of Insurance.

xii. The Contractor shall provide the City thirty (30) calendar days' written notice of erosion of the aggregate limits below occurrence limits for all applicable coverages indicated within the Contract.

xiii. The insurance coverages specified in Section 0400, Supplemental Purchase Provisions, are required minimums and are not intended to limit the responsibility or liability of the Contractor.

B. Specific Coverage Requirements: Specific insurance requirements are contained in Section 0400, Supplemental Purchase Provisions

33. **CLAIMS**: If any claim, demand, suit, or other action is asserted against the Contractor which arises under or concerns the Contract, or which could have a material adverse affect on the Contractor's ability to perform thereunder, the Contractor shall give written notice thereof to the City within ten (10) calendar days after receipt of notice by the

Contractor. Such notice to the City shall state the date of notification of any such claim, demand, suit, or other action; the names and addresses of the claimant(s); the basis thereof; and the name of each person against whom such claim is being asserted. Such notice shall be delivered personally or by mail and shall be sent to the City and to the Austin City Attorney. Personal delivery to the City Attorney shall be to City Hall, 301 West 2nd Street, 4th Floor, Austin, Texas 78701, and mail delivery shall be to P.O. Box 1088, Austin, Texas 78767.

34. **NOTICES**: Unless otherwise specified, all notices, requests, or other communications required or appropriate to be given under the Contract shall be in writing and shall be deemed delivered three (3) business days after postmarked if sent by U.S. Postal Service Certified or Registered Mail, Return Receipt Requested. Notices delivered by other means shall be deemed delivered upon receipt by the addressee. Routine communications may be made by first class mail, telefax, or other commercially accepted means. Notices to the Contractor shall be sent to the address specified in the Contractor's Offer, or at such other address as a party may notify the other in writing. Notices to the City shall be addressed to the City at P.O. Box 1088, Austin, Texas 78767 and marked to the attention of the Contract Administrator.

35. **RIGHTS TO BID, PROPOSAL AND CONTRACTUAL MATERIAL**: All material submitted by the Contractor to the City shall become property of the City upon receipt. Any portions of such material claimed by the Contractor to be proprietary must be clearly marked as such. Determination of the public nature of the material is subject to the Texas Public Information Act, Chapter 552, Texas Government Code.

36. **NO WARRANTY BY CITY AGAINST INFRINGEMENTS**: The Contractor represents and warrants to the City that: (i) the Contractor shall provide the City good and indefeasible title to the Deliverables and (ii) the Deliverables supplied by the Contractor in accordance with the specifications in the Contract will not infringe, directly or contributorily, any patent, trademark, copyright, trade secret, or any other intellectual property right of any kind of any third party; that no claims have been made by any person or entity with respect to the ownership or operation of the Deliverables and the Contractor does not know of any valid basis for any such claims. The Contractor shall, at its sole expense, defend, indemnify, and hold the City harmless from and against all liability, damages, and costs (including court costs and reasonable fees of attorneys and other professionals) arising out of or resulting from: (i) any claim that the City's exercise anywhere in the world of the rights associated with the City's' ownership, and if applicable, license rights, and its use of the Deliverables infringes the intellectual property rights of any third party; or (ii) the Contractor's breach of any of Contractor's representations or warranties stated in this Contract. In the event of any such claim, the City shall have the right to monitor such claim or at its option engage its own separate counsel to act as co-counsel on the City's behalf. Further, Contractor agrees that the City's specifications regarding the Deliverables shall in no way diminish Contractor's warranties or obligations under this paragraph and the City makes no warranty that the production, development, or delivery of such Deliverables will not impact such warranties of Contractor.

37. **CONFIDENTIALITY**: In order to provide the Deliverables to the City, Contractor may require access to certain of the City's and/or its licensors' confidential information (including inventions, employee information, trade secrets, confidential know-how, confidential business information, and other information which the City or its licensors consider confidential) (collectively, "Confidential Information"). Contractor acknowledges and agrees that the Confidential Information is the valuable property of the City and/or its licensors and any unauthorized use, disclosure, dissemination, or other release of the Confidential Information will substantially injure the City and/or its licensors. The Contractor (including its employees, subcontractors, agents, or representatives) agrees that it will maintain the Confidential Information in strict confidence and shall not disclose, disseminate, copy, divulge, recreate, or otherwise use the Confidential Information without the prior written consent of the City or in a manner not expressly permitted under this Agreement, unless the Confidential Information is required to be disclosed by law or an order of any court or other governmental authority with proper jurisdiction, provided the Contractor promptly notifies the City before disclosing such information so as to permit the City reasonable time to seek an appropriate protective order. The Contractor agrees to use protective measures no less stringent than the Contractor uses within its own business to protect its own most valuable information, which protective measures shall under all circumstances be at least reasonable measures to ensure the continued confidentiality of the Confidential Information.

38. **PUBLICATIONS**: All published material and written reports submitted under the Contract must be originally developed material unless otherwise specifically provided in the Contract. When material not originally developed is included in a report in any form, the source shall be identified.

39. **ADVERTISING**: The Contractor shall not advertise or publish, without the City's prior consent, the fact that the City has entered into the Contract, except to the extent required by law.

40. **NO CONTINGENT FEES**: The Contractor warrants that no person or selling agency has been employed or retained to solicit or secure the Contract upon any agreement or understanding for commission, percentage, brokerage, or contingent fee, excepting bona fide employees of bona fide established commercial or selling agencies maintained by the Contractor for the purpose of securing business. For breach or violation of this warranty, the City shall have the right, in addition to any other remedy available, to cancel the Contract without liability and to deduct from any amounts owed to the Contractor, or otherwise recover, the full amount of such commission, percentage, brokerage or contingent fee.

41. **GRATUITIES**: The City may, by written notice to the Contractor, cancel the Contract without liability if it is determined by the City that gratuities were offered or given by the Contractor or any agent or representative of the Contractor to any officer or employee of the City of Austin with a view toward securing the Contract or securing favorable treatment with respect to the awarding or amending or the making of any determinations with respect to the performing of such contract. In the event the Contract is canceled by the City pursuant to this provision, the City shall be entitled, in addition to any other rights and remedies, to recover or withhold the amount of the cost incurred by the Contractor in providing such gratuities.

42. **PROHIBITION AGAINST PERSONAL INTEREST IN CONTRACTS**: No officer, employee, independent consultant, or elected official of the City who is involved in the development, evaluation, or decision-making process of the performance of any solicitation shall have a financial interest, direct or indirect, in the Contract resulting from that solicitation. Any willful violation of this section shall constitute impropriety in office, and any officer or employee guilty thereof shall be subject to disciplinary action up to and including dismissal. Any violation of this provision, with the knowledge, expressed or implied, of the Contractor shall render the Contract voidable by the City.

43. **INDEPENDENT CONTRACTOR**: The Contract shall not be construed as creating an employer/employee relationship, a partnership, or a joint venture. The Contractor's services shall be those of an independent contractor. The Contractor agrees and understands that the Contract does not grant any rights or privileges established for employees of the City.

44. **ASSIGNMENT-DELEGATION**: The Contract shall be binding upon and enure to the benefit of the City and the Contractor and their respective successors and assigns, provided however, that no right or interest in the Contract shall be assigned and no obligation shall be delegated by the Contractor without the prior written consent of the City. Any attempted assignment or delegation by the Contractor shall be void unless made in conformity with this paragraph. The Contract is not intended to confer rights or benefits on any person, firm or entity not a party hereto; it being the intention of the parties that there be no third party beneficiaries to the Contract.

45. **WAIVER**: No claim or right arising out of a breach of the Contract can be discharged in whole or in part by a waiver or renunciation of the claim or right unless the waiver or renunciation is supported by consideration and is in writing signed by the aggrieved party. No waiver by either the Contractor or the City of any one or more events of default by the other party shall operate as, or be construed to be, a permanent waiver of any rights or obligations under the Contract, or an express or implied acceptance of any other existing or future default or defaults, whether of a similar or different character.

46. **MODIFICATIONS**: The Contract can be modified or amended only by a writing signed by both parties. No pre-printed or similar terms on any the Contractor invoice, order or other document shall have any force or effect to change the terms, covenants, and conditions of the Contract.

47. **INTERPRETATION**: The Contract is intended by the parties as a final, complete and exclusive statement of the terms of their agreement. No course of prior dealing between the parties or course of performance or usage of the trade shall be relevant to supplement or explain any term used in the Contract. Although the Contract may have been substantially drafted by one party, it is the intent of the parties that all provisions be construed in a manner to be fair to both parties, reading no provisions more strictly against one party or the other. Whenever a term defined by the Uniform Commercial Code, as enacted by the State of Texas, is used in the Contract, the UCC definition shall control, unless otherwise defined in the Contract.

48. **DISPUTE RESOLUTION**:

A. If a dispute arises out of or relates to the Contract, or the breach thereof, the parties agree to negotiate prior to prosecuting a suit for damages. However, this section does not prohibit the filing of a lawsuit to toll the running of a statute of limitations or to seek injunctive relief. Either party may make a written request for a meeting between representatives of each party within fourteen (14) calendar days after receipt of the request or such later period as agreed by the parties. Each party shall include, at a minimum, one (1) senior level individual with decision-making authority regarding the dispute. The purpose of this and any subsequent meeting is to attempt in good faith to negotiate a resolution of the dispute. If, within thirty (30) calendar days after such meeting, the parties have not succeeded in negotiating a resolution of the dispute, they will proceed directly to mediation as described below. Negotiation may be waived by a written agreement signed by both parties, in which event the parties may proceed directly to mediation as described below.

B. If the efforts to resolve the dispute through negotiation fail, or the parties waive the negotiation process, the parties may select, within thirty (30) calendar days, a mediator trained in mediation skills to assist with resolution of the dispute. Should they choose this option, the City and the Contractor agree to act in good faith in the selection of the mediator and to give consideration to qualified individuals nominated to act as mediator. Nothing in the Contract prevents the parties from relying on the skills of a person who is trained in the subject matter of the dispute or a contract interpretation expert. If the parties fail to agree on a mediator within thirty (30) calendar days of initiation of the mediation process, the mediator shall be selected by the Travis County Dispute Resolution Center (DRC). The parties agree to participate in mediation in good faith for up to thirty (30) calendar days from the date of the first mediation session. The City and the Contractor will share the mediator's fees equally and the parties will bear their own costs of participation such as fees for any consultants or attorneys they may utilize to represent them or otherwise assist them in the mediation.

49. **JURISDICTION AND VENUE**: The Contract is made under and shall be governed by the laws of the State of Texas, including, when applicable, the Uniform Commercial Code as adopted in Texas, V.T.C.A., Bus. & Comm. Code, Chapter 1, excluding any rule or principle that would refer to and apply the substantive law of another state or jurisdiction. All issues arising from this Contract shall be resolved in the courts of Travis County, Texas and the parties agree to submit to the exclusive personal jurisdiction of such courts. The foregoing, however, shall not be construed or interpreted to limit or restrict the right or ability of the City to seek and secure injunctive relief from any competent authority as contemplated herein.

50. **INVALIDITY**: The invalidity, illegality, or unenforceability of any provision of the Contract shall in no way affect the validity or enforceability of any other portion or provision of the Contract. Any void provision shall be deemed severed from the Contract and the balance of the Contract shall be construed and enforced as if the Contract did not contain the particular portion or provision held to be void. The parties further agree to reform the Contract to replace any stricken provision with a valid provision that comes as close as possible to the intent of the stricken provision. The provisions of this section shall not prevent this entire Contract from being void should a provision which is the essence of the Contract be determined to be void.

51. **HOLIDAYS:** The following holidays are observed by the City:

Holiday	Date Observed
New Year's Day	January 1
Martin Luther King, Jr.'s Birthday	Third Monday in January
President's Day	Third Monday in February
Memorial Day	Last Monday in May
Independence Day	July 4
Labor Day	First Monday in September
Veteran's Day	November 11

Thanksgiving Day	Fourth Thursday in November
Friday after Thanksgiving	Friday after Thanksgiving
Christmas Eve	December 24
Christmas Day	December 25

If a Legal Holiday falls on Saturday, it will be observed on the preceding Friday. If a Legal Holiday falls on Sunday, it will be observed on the following Monday.

52. **SURVIVABILITY OF OBLIGATIONS:** All provisions of the Contract that impose continuing obligations on the parties, including but not limited to the warranty, indemnity, and confidentiality obligations of the parties, shall survive the expiration or termination of the Contract.

53. **NON-SUSPENSION OR DEBARMENT CERTIFICATION:**

The City of Austin is prohibited from contracting with or making prime or sub-awards to parties that are suspended or debarred or whose principals are suspended or debarred from Federal, State, or City of Austin Contracts. By accepting a Contract with the City, the Vendor certifies that its firm and its principals are not currently suspended or debarred from doing business with the Federal Government, as indicated by the General Services Administration List of Parties Excluded from Federal Procurement and Non-Procurement Programs, the State of Texas, or the City of Austin.

54. **EQUAL OPPORTUNITY**

A. **Equal Employment Opportunity:** No Contractor, or Contractor's agent, shall engage in any discriminatory employment practice as defined in Chapter 5-4 of the City Code. No Offer submitted to the City shall be considered, nor any Purchase Order issued, or any Contract awarded by the City unless the Offeror has executed and filed with the City Purchasing Office a current Non-Discrimination Certification. Non-compliance with Chapter 5-4 of the City Code may result in sanctions, including termination of the contract and the Contractor's suspension or debarment from participation on future City contracts until deemed compliant with Chapter 5-4.

B. **Americans with Disabilities Act (ADA) Compliance:** No Contractor, or Contractor's agent, shall engage in any discriminatory practice against individuals with disabilities as defined in the ADA, including but not limited to: employment, accessibility to goods and services, reasonable accommodations, and effective communications.

55. **INTERESTED PARTIES DISCLOSURE**

As a condition to entering the Contract, the Business Entity constituting the Offeror must provide the following disclosure of Interested Parties to the City prior to the award of a contract with the City on Form 1295 "Certificate of Interested Parties" as prescribed by the Texas Ethics Commission for any contract award requiring council authorization. The Certificate of Interested Parties Form must be completed on the Texas Ethics Commission website, printed, and signed by the authorized agent of the Business Entity with acknowledgment that disclosure is made under oath and under penalty of perjury. The City will submit the "Certificate of Interested Parties" to the Texas Ethics Commission within 30 days of receipt from the successful Offeror. The Offeror is reminded that the provisions of Local Government Code 176, regarding conflicts of interest between the bidders and local officials remains in place. Link to Texas Ethics Commission Form 1295 process and procedures below:

https://www.ethics.state.tx.us/whatsnew/elf_info_form1295.htm

56. **BUY AMERICAN ACT-SUPPLIES (Applicable to certain Federally funded requirements)**

A. Definitions. As used in this paragraph –

i. "Component" means an article, material, or supply incorporated directly into an end product.

ii. "Cost of components" means -

(1) For components purchased by the Contractor, the acquisition cost, including transportation costs to the place of incorporation into the end product (whether or not such costs are paid to a domestic firm), and any applicable duty (whether or not a duty-free entry certificate is issued); or

(2) For components manufactured by the Contractor, all costs associated with the manufacture of the component, including transportation costs as described in paragraph (1) of this definition, plus allocable overhead costs, but excluding profit. Cost of components does not include any costs associated with the manufacture of the end product.

iii. "Domestic end product" means-

(1) An unmanufactured end product mined or produced in the United States; or

(2) An end product manufactured in the United States, if the cost of its components mined, produced, or manufactured in the United States exceeds 50 percent of the cost of all its components. Components of foreign origin of the same class or kind as those that the agency determines are not mined, produced, or manufactured in sufficient and reasonably available commercial quantities of a satisfactory quality are treated as domestic. Scrap generated, collected, and prepared for processing in the United States is considered domestic.

iv. "End product" means those articles, materials, and supplies to be acquired under the contract for public use.

v. "Foreign end product" means an end product other than a domestic end product.

vi. "United States" means the 50 States, the District of Columbia, and outlying areas.

B. The Buy American Act (41 U.S.C. 10a - 10d) provides a preference for domestic end products for supplies acquired for use in the United States.

C. The City does not maintain a list of foreign articles that will be treated as domestic for this Contract; but will consider for approval foreign articles as domestic for this product if the articles are on a list approved by another Governmental Agency. The Offeror shall submit documentation with their Offer demonstrating that the article is on an approved Governmental list.

D. The Contractor shall deliver only domestic end products except to the extent that it specified delivery of foreign end products in the provision of the Solicitation entitled "Buy American Act Certificate".

CITY OF AUSTIN
PURCHASING OFFICE
SUPPLEMENTAL PURCHASE PROVISIONS
RFQ ISR0416

The following Supplemental Purchasing Provisions apply to this solicitation:

1. **EXPLANATIONS OR CLARIFICATIONS:** (reference paragraph 5 in Section 0200)

   All requests for explanations or clarifications must be submitted in writing to the Purchasing Office by March 3rd, 2017, close of business, either by fax at 512-974-2388 or via e-mail at Irene.sanchez-rocha@austintexas.gov

2. **ALTERNATE OFFERS:** (reference paragraph 7A in Section 0200)

   Alternate Offers will NOT be considered.

3. **INSURANCE:** Insurance is required for this solicitation.

   A. **General Requirements:** See Section 0300, Standard Purchase Terms and Conditions, paragraph 32, entitled Insurance, for general insurance requirements.

      i. The Contractor shall provide a Certificate of Insurance as verification of coverages required below to the City at the below address prior to contract execution and within 14 calendar days after written request from the City. Failure to provide the required Certificate of Insurance may subject the Offer to disqualification from consideration for award
      ii. The Contractor shall not commence work until the required insurance is obtained and until such insurance has been reviewed by the City. Approval of insurance by the City shall not relieve or decrease the liability of the Contractor hereunder and shall not be construed to be a limitation of liability on the part of the Contractor.
      iii. The Contractor must also forward a Certificate of Insurance to the City whenever a previously identified policy period has expired, or an extension option or holdover period is exercised, as verification of continuing coverage.
      iv. The Certificate of Insurance, and updates, shall be mailed to the following address:

         City of Austin Purchasing Office
         P. O. Box 1088
         Austin, Texas 78767

   B. **Specific Coverage Requirements:** The Contractor shall at a minimum carry insurance in the types and amounts indicated below for the duration of the Contract, including extension options and hold over periods, and during any warranty period. These insurance coverages are required minimums and are not intended to limit the responsibility or liability of the Contractor.

      i. **Worker's Compensation and Employers' Liability Insurance:** Coverage shall be consistent with statutory benefits outlined in the Texas Worker's Compensation Act (Section 401). The minimum policy limits for Employer's Liability are $100,000 bodily injury each accident, $500,000 bodily injury by disease policy limit and $100,000 bodily injury by disease each employee.
         (1) The Contractor's policy shall apply to the State of Texas and include these endorsements in favor of the City of Austin:
            (a) Waiver of Subrogation, Form WC420304, or equivalent coverage
            (b) Thirty (30) days Notice of Cancellation, Form WC420601, or equivalent coverage
      ii. **Commercial General Liability Insurance:** The minimum bodily injury and property damage per occurrence are $500,000 for coverages A (Bodily Injury and Property Damage) and B (Personal and Advertising Injury).
         (1) The policy shall contain the following provisions:
            (a) Contractual liability coverage for liability assumed under the Contract and all other Contracts related to the project.
            (b) Contractor/Subcontracted Work.

(c) Products/Completed Operations Liability for the duration of the warranty period.
(d) If the project involves digging or drilling provisions must be included that provide Explosion, Collapse, and/or Underground Coverage.

(2) The policy shall also include these endorsements in favor of the City of Austin:
(a) Waiver of Subrogation, Endorsement CG 2404, or equivalent coverage
(b) Thirty (30) days Notice of Cancellation, Endorsement CG 0205, or equivalent coverage
(c) The City of Austin listed as an additional insured, Endorsement CG 2010, or equivalent coverage

iii. **Business Automobile Liability Insurance:** The Contractor shall provide coverage for all owned, non-owned and hired vehicles with a minimum combined single limit of $500,000 per occurrence for bodily injury and property damage. Alternate acceptable limits are $250,000 bodily injury per person, $500,000 bodily injury per occurrence and at least $100,000 property damage liability per accident.

(1) The policy shall include these endorsements in favor of the City of Austin:
(a) Waiver of Subrogation, Endorsement CA0444, or equivalent coverage
(b) Thirty (30) days Notice of Cancellation, Endorsement CA0244, or equivalent coverage
(c) The City of Austin listed as an additional insured, Endorsement CA2048, or equivalent coverage.

C. **Endorsements:** The specific insurance coverage endorsements specified above, or their equivalents must be provided. In the event that endorsements, which are the equivalent of the required coverage, are proposed to be substituted for the required coverage, copies of the equivalent endorsements must be provided for the City's review and approval.

4. **TERM OF CONTRACT:**

A. The Contract shall be in effect for an initial term of twelve months and may be extended thereafter for up to two additional twelve month periods, subject to the approval of the Contractor and the City Purchasing Officer or his designee.

B. Upon expiration of the initial term or period of extension, the Contractor agrees to hold over under the terms and conditions of this agreement for such a period of time as is reasonably necessary to re-solicit and/or complete the project (not to exceed 120 days unless mutually agreed on in writing).

C. Upon written notice to the Contractor from the City's Purchasing Officer or his designee and acceptance of the Contractor, the term of this contract shall be extended on the same terms and conditions for an additional period as indicated in paragraph A above.

D. Prices are firm and fixed for the first twelve months. Thereafter, price changes are subject to the Economic Price Adjustment provisions of this Contract.

THIS IS A 12 MONTH CONTRACT
FIRM PRICES ARE TO BE SUBMITTED FOR THE FIRST TWELVE (12) MONTH PERIOD

5. **QUANTITIES:** The quantities listed herein are estimates for the period of the Contract. The City reserves the right to purchase more or less of these quantities as may be required during the Contract term. Quantities will be as needed and specified by the City for each order. Unless specified in the solicitation, there are no minimum order quantities.

6. **DELIVERY REQUIREMENTS:**

A. Delivery is to be made within 30 calendar days after the order is placed (either verbally or in writing). All orders must be shipped complete unless arrangement for partial shipments are made in advance.

B. The Contractor shall provide, with each delivery, a Shipping or Delivery Ticket showing the description of each item, quantity, and unit price.

C. The Contractor shall confirm the quantity to be shipped on all orders via phone or e-mail within two (2) hours of notification by phone from the City.

D. Unless requested by the City, deliveries shall not be made on City-recognized legal holidays (see paragraph 51 in Section 0300).

7. **INVOICES and PAYMENT:** (reference paragraphs 12 and 13 in Section 0300)

A. Invoices shall contain a unique invoice number and the information required in Section 0300, paragraph 12, entitled "Invoices." Invoices received without all required information cannot be processed and will be returned to the vendor. Invoices may be mailed however E-mail is preferred.

Invoices may be mailed to the below address:

	City of Austin
Department	Austin Resource Recovery Department (ARR)
Attn:	Accounts Payable
Address	PO. Box 1088
City, State Zip Code	Austin, Texas 78759
Email Address	ARR.AP@austintexas.gov

Invoices **shall** be E-mailed to the below E-mail address:

	City of Austin
Department	Austin Resource Recovery Department (ARR)
Email Address	ARR.AP@austintexas.gov

B. The Contractor agrees to accept payment by either credit card, check or Electronic Funds Transfer (EFT) for all goods and/or services provided under the Contract. The Contractor shall factor the cost of processing credit card payments into the Offer. There shall be no additional charges, surcharges, or penalties to the City for payments made by credit card.

8. **RESTOCKING FEES:**

A. The Contractor may bill the City restocking fees (if included in their Offer) for parts that are ordered by the City under the contract and returned for refund. The Contractor is not obligated to accept for refund any part that is not resalable and/or not in the same condition as when purchased.

B. Restocking fees may be charged to the City when multiple parts or groups of parts are returned for refund at one time due to the City inventory warehouse cleaning, unless these parts are returned at

an annual pre-arranged date. The date for the annual return shall be mutually agreed upon between the City and the Contractor.

9. **SAMPLES – EXACT REPLICA:**

A. The Offeror shall submit an exact replica of the goods to be provided per specification. This sample shall be provided within five (5) working days after request by the City.

B. Send samples to the City at the following address:

City of Austin	
Department	Austin Resource Recovery
Address	1520Rutherford Lane
City, State Zip Code	Austin, Texas 78754
Attn:	Tom Fulmer

C. All products provided to the City under this solicitation will be evaluated or tested and must meet all requirements of the specification, regardless of whether or not all requirements are to be evaluated or tested.

D. Samples will be provided at no cost to the City, will be retained by the City, and may be used for use in assuring compliance with materials specifications after award. Failure to supply samples when requested shall subject the Offer to disqualification from consideration for award.

E. Samples will be evaluated or tested as follows:

A visual test shall be performed to confirm compliance to written specification.

10. **PUBLISHED PRICE LISTS:**

A. Offerors must quote using published price lists in the following ways:

i. Offerors may quote one discount from a Published Price List for all offered items to be covered in the Contract. The discount must remain firm during the life of the Contract.
ii. Offerors may quote their dealer cost, plus a percentage markup to be added to the cost. The percentage markup must remain firm during the life of the contract.

B. Two (2) copies of the list upon which the discounts or markups are based shall be submitted with the Offer. All price lists identified in the Offer shall clearly include the Offeror's name and address, the solicitation number, prices, title of the discount and number, and the latest effective date of the price list. If the Offer is based on a discount or markup on a manufacturer's price list, the price list must also include the manufacturer's name, the manufacturer's latest effective date, and the manufacturer's price schedule. All price lists submitted become part of the Offer.

C. The price list may be superseded or replaced during the Contract term only if price revisions are the result of the manufacturer's official price list revision. Written notification from the Contractor of price changes, along with two (2) copies of the revised list must be submitted to the Buyer in the Purchasing Office with the effective date of change to be at least 60 calendar days (30 unless a different period is inserted) after written notification. The City reserves the right to refuse any list revision.

D. The discounts or markups on equipment rental, material, supplies, parts, and contract services shall be fixed throughout the term of the Contract, and are not subject to increase.

E. Failure to submit written notification of price list revisions will result in the rejection of new prices being invoiced. The City will only pay invoices according to the last approved price list.

11. **ECONOMIC PRICE ADJUSTMENT:**

A. **Price Adjustments:** Prices shown in this Contract shall remain firm for the first twelve months of the Contract. After that, in recognition of the potential for fluctuation of the Contractor's cost, a price adjustment (increase or decrease) may be requested by either the City or the Contractor on the anniversary date of the Contract or as may otherwise be specified herein. The percentage change between the contract price and the requested price shall not exceed the percentage change between the specified index in effect on the date the solicitation closed and the most recent, non-preliminary data at the time the price adjustment is requested. The requested price adjustment shall not exceed twenty-five percent (25%) for any single line item and in no event shall the total amount of the contract be automatically adjusted as a result of the change in one or more line items made pursuant to this provision. Prices for products or services unaffected by verifiable cost trends shall not be subject to adjustment.

B. **Effective Date:** Approved price adjustments will go into effect on the first day of the upcoming renewal period or anniversary date of contract award and remain in effect until contract expiration unless changed by subsequent amendment.

C. **Adjustments:** A request for price adjustment must be made in writing and submitted to the other Party prior to the yearly anniversary date of the Contract; adjustments may only be considered at that time unless otherwise specified herein. Requested adjustments must be solely for the purpose of accommodating changes in the Contractor's direct costs. Contractor shall provide an updated price listing once agreed to adjustment(s) have been approved by the parties.

D. **Indexes:** In most cases an index from the Bureau of Labor Standards (BLS) will be utilized; however, if there is more appropriate, industry recognized standard then that index may be selected.

i. The following definitions apply:
(1) **Base Period:** Month and year of the original contracted price (the solicitation close date).
(2) **Base Price:** Initial price quoted, proposed and/or contracted per unit of measure.
(3) **Adjusted Price:** Base Price after it has been adjusted in accordance with the applicable index change and instructions provided.
(4) **Change Factor:** The multiplier utilized to adjust the Base Price to the Adjusted Price.
(5) **Weight %:** The percent of the Base Price subject to adjustment based on an index change.

ii. **Adjustment-Request Review:** Each adjustment-request received will be reviewed and compared to changes in the index(es) identified below. Where applicable:
(1) Utilize final Compilation data instead of Preliminary data
(2) If the referenced index is no longer available shift up to the next higher category index.

iii. **Index Identification:** Complete table as they may apply.

Weight % or $ of Base Price: 100%	
Database Name: Bureau of Labor Statistics	
Series ID: PCU326121326121	
☒ Not Seasonally Adjusted	☐ Seasonally Adjusted
Geographical Area: Statewide	

Description of Series ID: Unlaminated plastics profile shape manufacturing
This Index shall apply to the following items of the Bid Sheet / Cost Proposal: All

E. **Calculation:** Price adjustment will be calculated as follows:

Single Index: Adjust the Base Price by the same factor calculated for the index change.

Index at time of calculation
Divided by index on solicitation close date
Equals Change Factor
Multiplied by the Base Rate
Equals the Adjusted Price

12. **INTERLOCAL PURCHASING AGREEMENTS:** (applicable to competitively procured goods/services contracts).

A. The City has entered into Interlocal Purchasing Agreements with other governmental entities, pursuant to the Interlocal Cooperation Act, Chapter 791 of the Texas Government Code. The Contractor agrees to offer the same prices and terms and conditions to other eligible governmental agencies that have an interlocal agreement with the City.

B. The City does not accept any responsibility or liability for the purchases by other governmental agencies through an interlocal cooperative agreement.

13. **CONTRACT MANAGER:** The following person is designated as Contract Manager, and will act as the contact point between the City and the Contractor during the term of the Contract:

Tom Fulmer

512-974-1065

Tom.Fulmer@AUSTINTEXAS.GOV

CITY OF AUSTIN, TEXAS
PURCHASE SPECIFICATION

FOR

BUCKETS and LIDS

1.0 PURPOSE

The City of Austin seeks bids from all qualified Vendors to provide buckets and lids for the Austin Resource Recover (ARR) re-blended paint program. The City will periodically order the buckets and lids based upon quantity and demand for the reblended paints.

2.0 TECHNICAL REQUIREMENTS

2.1. 3.5 gallon capacity

2.2. No color preference

2.3 Made of 90 mil HDPE plastic

2.4 Height 10.80 +/- 0.010

2.5 Maximum fill level 448 fluid ounces

2.6. Bucket must have a wire handle; 12 gauge galvanized wire with injection molded plastic grip

2.7. Bucket must include a solid gasket snap on top lid that is made to fit the 3.5 gallon bucket with tear strips to seal contents.

2.8. The bottom sprue area must be flush with bucket, no center nipple permitted on the bottom. No items protruding from the bottom.

3.0 INSPECTION AND TEST REQUIREMENTS

3.1 Visual inspection to ensure compliance to these specifications.

3.2. Include a picture of: the bucket, the bottom of the bucket; and, the lid that you are proposing to supply as well as detailed specification.

The City reserves the right to determine if an alternative product submitted will meet the needs of the specifications and select an alternative to the specifications provided.

QUOTE SHEET
CITY OF AUSTIN
BUCKETS AND LIDS

QUOTE NO.: ISR0416

RQM NO.: 1500 17022700311

CLOSING DATE & TIME: March 7, 2017 @ 3:00 p.m.

BUYER: Irene Sanchez-Rocha

Copies of Qutoe: Vendor must submit two copies of its signed quote - one original and one copy.

THIS IS A 12- MONTH CONTRACT WITH TWO 12-MONTH EXENSION OPTIONS. FIRM PRICES ARE TO BE QUOTED FOR THE FIRST TWELVE (12) MONTH PERIOD.

Special Instructions: Be advised that exceptions taken to any portion of the solicitations may jeopardize acceptance of the quote and may result in disqualification of the quote..

A quote of '0' (zero) will be interpreted by the City as a no-charge (free) item and the City will not expect to pay for that item. A bid of 'no bid' will be interpreted by the City that the responder does not wish to quote on that item.

The quantities noted below are annual estimates and not a guarantee of actual volume. The City does not guarantee the purchase of the quantities listed. Quantities are provided as a guide based on historical usage. Actual purchases may be more or less.

ITEM NO.	City Stock Number	ITEM DESCRIPTION	ESTIMATED ANNUAL QUANTITY	UNIT	UNIT PRICE	EXTENDED PRICE
	CLIN 1*	3.5 gal buckets as described in the Statement of Work	9,900	EA.	$3.21/DELIVERED PRICE	$ 31,779
	CLIN 2*	3.5 gal lids as described in the Statement of Work	9,900	EA.	$0.88/DELIVERED PRICE	$ 8,712
		*** Orders may be placed in increments of up to 3,300 units per order.**				
				TOTAL PRICE		$ 40,491

OFFERORS BEST DELIVERY IS 3-4 CALENDAR DAYS AFTER RECEIPT OF ORDER

DELIVERY TERMS: DELIVERY IS TO BE FOB DESTINATION, PREPAID AND ALLOWED

DELIVERY METHOD: PREPAID

COMPANY NAME: ~~ILLING COMPANY~~ TREK FREIGHT Date ~~3/3/2017~~ 3/6/2017

PRINT NAME OF AUTHORIZED REPRESENTATIVE: A.J. Morgan REPRESENTATIVE TITLE : Sales Representative

SIGNATURE OF AUTHORIZED REPRESENTATIVE: A.J. Morgan

PHONE/CELL NUMBER: 262-253-4241 Email address: ajmorgan@illingcompany.com

Section 0700: Reference Sheet

Responding Company Name ILLING COMPANY

The City at its discretion may check references in order to determine the Offeror's experience and ability to provide the products and/or services described in this Solicitation. The Offeror shall furnish at least 3 complete and verifiable references. References shall consist of customers to whom the offeror has provided the same or similar services within the last 5 years. References shall indicate a record of positive past performance.

1. Company's Name SEAL BOND
   Name and Title of Contact TAMELA PAUL / MATERIALS MANAGER
   Project Name POLY & STEEL PACKAGING
   Present Address 14851 MIKHAEL LANE
   City, State, Zip Code SPRING LAKE, MI 49456
   Telephone Number (616) 850-0507 x+: 122 Fax Number (____)____
   Email Address tpaul@seal-bond.com

2. Company's Name PHARM ALOE
   Name and Title of Contact Sarah Gallagher / PURCHASING MANAGER
   Project Name POLY PACKAGING
   Present Address 10743 MAIN ST.
   City, State, Zip Code WOODFORD, WI 53599
   Telephone Number (800) 972-2981 Fax Number (____)____
   Email Address sg@pharmaloe.com

3. Company's Name CONTRACT COMESTIBLES
   Name and Title of Contact CHRIS BRAWNER / PURCHASING
   Project Name GLASS & POLY PACKAGING
   Present Address 2941 ELM STREET
   City, State, Zip Code EAST TROY, WI 53120
   Telephone Number (262) 642-9400 Fax Number (____)____
   Email Address cbrawner@contractcomestibles.com

City of Austin, Texas
Section 0800
NON-DISCRIMINATION AND NON-RETALIATION CERTIFICATION

City of Austin, Texas

Equal Employment/Fair Housing Office

To: City of Austin, Texas,

I hereby certify that our firm complies with the Code of the City of Austin, Section 5-4-2 as reiterated below, and agrees:

(1) Not to engage in any discriminatory employment practice defined in this chapter.

(2) To take affirmative action to ensure that applicants are employed, and that employees are treated during employment, without discrimination being practiced against them as defined in this chapter, including affirmative action relative to employment, promotion, demotion or transfer, recruitment or recruitment advertising, layoff or termination, rate of pay or other forms of compensation, and selection for training or any other terms, conditions or privileges of employment.

(3) To post in conspicuous places, available to employees and applicants for employment, notices to be provided by the Equal Employment/Fair Housing Office setting forth the provisions of this chapter.

(4) To state in all solicitations or advertisements for employees placed by or on behalf of the Contractor, that all qualified applicants will receive consideration for employment without regard to race, creed, color, religion, national origin, sexual orientation, gender identity, disability, sex or age.

(5) To obtain a written statement from any labor union or labor organization furnishing labor or service to Contractors in which said union or organization has agreed not to engage in any discriminatory employment practices as defined in this chapter and to take affirmative action to implement policies and provisions of this chapter.

(6) To cooperate fully with City and the Equal Employment/Fair Housing Office in connection with any investigation or conciliation effort of the Equal Employment/Fair Housing Office to ensure that the purpose of the provisions against discriminatory employment practices are being carried out.

(7) To require of all subcontractors having 15 or more employees who hold any subcontract providing for the expenditure of $2,000 or more in connection with any contract with the City subject to the terms of this chapter that they do not engage in any discriminatory employment practice as defined in this chapter

For the purposes of this Offer and any resulting Contract, Contractor adopts the provisions of the City's Minimum Standard Non-Discrimination and Non-Retaliation Policy set forth below.

City of Austin
Minimum Standard Non-Discrimination and Non-Retaliation in Employment Policy

As an Equal Employment Opportunity (EEO) employer, the Contractor will conduct its personnel activities in accordance with established federal, state and local EEO laws and regulations.

The Contractor will not discriminate against any applicant or employee based on race, creed, color, national origin, sex, age, religion, veteran status, gender identity, disability, or sexual orientation. This policy covers all aspects of employment, including hiring, placement, upgrading, transfer, demotion, recruitment, recruitment advertising, selection for training and apprenticeship, rates of pay or other forms of compensation, and layoff or termination.

The Contractor agrees to prohibit retaliation, discharge or otherwise discrimination against any employee or applicant for employment who has inquired about, discussed or disclosed their compensation.

Further, employees who experience discrimination, sexual harassment, or another form of harassment should immediately report it to their supervisor. If this is not a suitable avenue for addressing their compliant, employees are advised to contact another member of management or their human resources representative. No employee shall be discriminated against, harassed, intimidated, nor suffer any reprisal as a result of reporting a violation of this policy. Furthermore, any employee, supervisor, or manager who becomes aware of any such discrimination or harassment should immediately report it to executive management or the human resources office to ensure that such conduct does not continue.

Contractor agrees that to the extent of any inconsistency, omission, or conflict with its current non-discrimination and non-retaliation employment policy, the Contractor has expressly adopted the provisions of the City's Minimum Non-Discrimination Policy contained in Section 5-4-2 of the City Code and set forth above, as the Contractor's Non-Discrimination Policy or as an amendment to such Policy and such provisions are intended to not only supplement the Contractor's policy, but will also supersede the Contractor's policy to the extent of any conflict.

UPON CONTRACT AWARD, THE CONTRACTOR SHALL PROVIDE THE CITY A COPY OF THE CONTRACTOR'S NON-DISCRIMINATION AND NON-RETALIATION POLICIES ON COMPANY LETTERHEAD, WHICH CONFORMS IN FORM, SCOPE, AND CONTENT TO THE CITY'S MINIMUM NON-DISCRIMINATION AND NON-RETALIATION POLICIES, AS SET FORTH HEREIN, **OR** THIS NON-DISCRIMINATION AND NON-RETALIATION POLICY, WHICH HAS BEEN ADOPTED BY THE CONTRACTOR FOR ALL PURPOSES WILL BE CONSIDERED THE CONTRACTOR'S NON-DISCRIMINATION AND NON-RETALIATION POLICY WITHOUT THE REQUIREMENT OF A SEPARATE SUBMITTAL.

Sanctions:

Our firm understands that non-compliance with Chapter 5-4 and the City's Non-Retaliation Policy may result in sanctions, including termination of the contract and suspension or debarment from participation in future City contracts until deemed compliant with the requirements of Chapter 5-4 and the Non-Retaliation Policy.

Term:

The Contractor agrees that this Section 0800 Non-Discrimination and Non-Retaliation Certificate of the Contractor's separate conforming policy, which the Contractor has executed and filed with the City, will remain in force and effect for one year from the date of filling. The Contractor further agrees that, in consideration of the receipt of continued Contract payment, the Contractor's Non-Discrimination and Non-Retaliation Policy will automatically renew from year-to-year for the term of the underlying Contract.

Dated this 3rd day of MARCH, 2017

CONTRACTOR ILLING COMPANY

Authorized Signature

Title Sales Rep

City of Austin, Texas
NON-SUSPENSION OR DEBARMENT CERTIFICATION

SOLICITATION NO. ISR0416

The City of Austin is prohibited from contracting with or making prime or sub-awards to parties that are suspended or debarred or whose principals are suspended or debarred from Federal, State, or City of Austin Contracts. Covered transactions include procurement contracts for goods or services equal to or in excess of $25,000.00 and all non-procurement transactions. This certification is required for all Vendors on all City of Austin Contracts to be awarded and all contract extensions with values equal to or in excess of $25,000.00 or more and all non-procurement transactions.

The Offeror hereby certifies that its firm and its principals are not currently suspended or debarred from bidding on any Federal, State, or City of Austin Contracts.

Contractor's Name:	ILLING COMPANY, INC.		
Signature of Officer or Authorized Representative:	Amy A. Martin	Date:	3-3-17
Printed Name:	AMY L. MARTIN		
Title:	DIRECTOR OF PURCHASING & PROCESS IMPROVEMENTS		

Section 0835: Non-Resident Bidder Provisions

Company Name ILLING COMPANY

A. Bidder must answer the following questions in accordance with Vernon's Texas Statues and Codes Annotated Government Code 2252.002, as amended:

Is the Bidder that is making and submitting this Bid a "Resident Bidder" or a "non-resident Bidder"?

Answer: NON-RESIDENT BIDDER

(1) Texas Resident Bidder- A Bidder whose principle place of business is in Texas and includes a Contractor whose ultimate parent company or majority owner has its principal place of business in Texas.
(2) Nonresident Bidder- A Bidder who is not a Texas Resident Bidder.

B. If the Bidder is a "Nonresident Bidder" does the state, in which the Nonresident Bidder's principal place of business is located, have a law requiring a Nonresident Bidder of that state to bid a certain amount or percentage under the Bid of a Resident Bidder of that state in order for the nonresident Bidder of that state to be awarded a Contract on such bid in said state?

Answer: NO Which State: WISCONSIN

C. If the answer to Question B is "yes", then what amount or percentage must a Texas Resident Bidder bid under the bid price of a Resident Bidder of that state in order to be awarded a Contract on such bid in said state?

Answer: _____

ENCORE Plastics corporation

January 27, 2017

A.J. Morgan
Illing Company
N114W18937 Clinton Drive
Germantown, WI 53022

Dear Mr. Morgan,

Please accept this letter as your documentation that the standard 3.5 gallon black EcoBlend pails contain 100% recycled material with 25% of the recycled material being post-consumer resin.

If you have any questions, please feel free to contact me directly.

Sincerely,

D. Craig Rathbun

D. Craig Rathbun

President

Corporate
319 Howard Drive
Sandusky, Ohio 44870
Phone 419.626.8000 Toll-Free 800.e.Encore
Fax 419.626.8095

Manufacturing
725 Water Street
Cambridge, Ohio 43725
Phone 740.432.1652
Fax 740.439.1732

Manufacturing
P.O. Box 230 6 Spruce Street
Remer, Minnesota 56672
Phone 218.566.2663 Toll-Free 800.331.7906
Fax 218.566.1322

www.e-Encore.com

ENCORE PLASTICS CORP.
CAMBRIDGE, OHIO
FORSYTH, GA
HDPE

ENCORE PLASTICS CORP.
TO OPEN BREAK SLOT BELOW AND PULL STRIP OFF COVER
HDPE

INDUSTRIAL Pail

3.5 Gallon 90 Mil
wire handle

Item Numbers: 39448

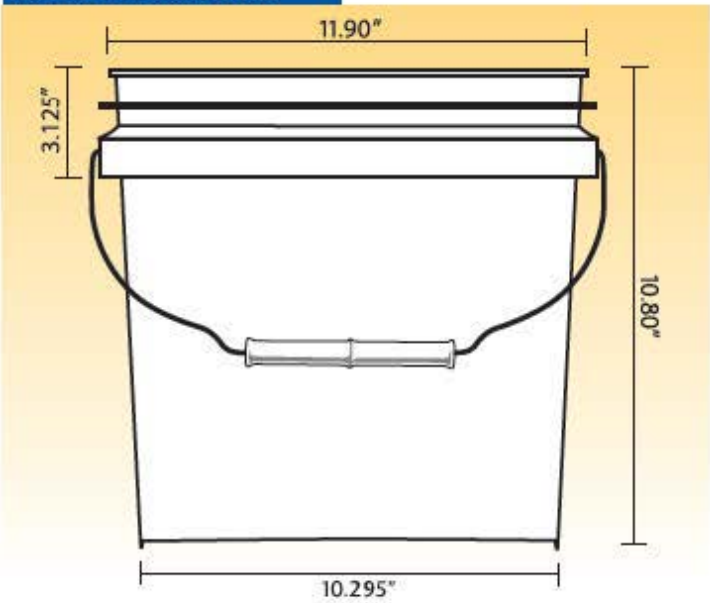

3.5 Gallon Pail

Material: HDPE

Wall Thickness: 0.090

Maximum Weight Capacity: 68 lbs.

Dimensions

Diameter: 11.90 +/- 0.010

Height: 10.80

Maximum Fill Level: 448 fluid ounces

4 color offset printing capability
& Heat Transfer Labels

Handle

Wire Handle: 12 gauge galvanized wire with injection molded plastic grip

Plastic Handle: 6 Melt HDPE plastic handle available

Item Numbers: 56000

3.5 Gallon Long Skirt Tear Tab Lid

Material: HDPE

Wall Thickness: 0.090

Dimensions

Diameter: 12.439 +/- 0.010

	Description	Item	Material	Case Pack	Cases Per Pallet	Ship Weight	Case Cube	Maximum Print Area	*Estimated Truckload Quantity (Containers and Lids)
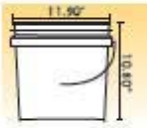	**3.5 Gallon** wire handle	39448	HDPE White or Natural	156	2	320	49.23	6-1/4" x 31-1/2", 1/2" gap	7,332/7,344 Pails / Lids 48ct.
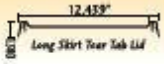		56000	HDPE White or Natural	48 288	24 4	35 238	4.46 26.01	N/A N/A	13,776

(Optional Lid 50000, 53000, 56000, 56400, 56700, 56750, 82124, 82136)

ADDENDUM
CITY OF AUSTIN, TEXAS

Solicitation: RFQ ISR0416 **Addendum No: #1** **Date of Addendum: March 6, 2017**

This addendum is to incorporate the following changes to the above referenced solicitation:

I. Questions:

Q 1. Would the "Estimated Annual Quantity" be purchased and delivered all on one order/invoice, or is that an approximation over how much would be ordered over the course of the year?

A 1. The "Estimated Annual Quantity" is an estimate of a year's use. The City reserves the right to order more or less.

Q 2. How many units would be part of a typical order/delivery?

A 2. The department has placed orders of up to 3,300 units each at one time, however the City reserves the right to order in any quantity required.

Q 3. If our company uses the manufacturer to ship the products for this bid do we also need to carry insurance as well?

A 3. If delivery is made by other than common carrier (FedEx, UPS, etc.) a certificate of insurance is required.

II. Extension: The quote due date is hereby extended until Wednesday, March 8, 2017 at 3:00 p.m.

The quote closing time and date is hereby extended until Wednesday, March 8, 2017 at 3:15 p.m.

III. ALL OTHER TERMS AND CONDITIONS REMAIN THE SAME.

APPROVED BY: _____ 3/6/17
Irene Sanchez-Rocha, Senior Buyer — Date
Purchasing Office, 512-974-2554

ACKNOWLEDGED BY:

AJ MORGAN _____ 3/6/17
Name — Authorized Signature — Date

RETURN ONE COPY OF THIS ADDENDUM TO THE PURCHASING OFFICE, CITY OF AUSTIN, WITH YOUR RESPONSE OR PRIOR TO THE SOLICIATION CLOSING DATE. FAILURE TO DO SO MAY CONSTITUTE GROUNDS FOR REJECTION.

Revised 12/13/2015