O03/105 E3 of 35

	Permit/Case	Reference File Name	Description	Sub Type / Work Type	Project Name	Status	Related Folder
24	2009-137750 BP	2009-137750 BP	New 878 S.F. Swimming Pool and 165 S.F. of concrete pool equipment pad (no decking as part of this permit). Requires an Enclosure Device for all Single-Family residences. The fence must be at least ...	R- 329 Res Structures Other Than Bldg / New	1855 WESTLAKE DR	Final	Yes
25	2009-137746 PR	2009-137746 PR	New 878 S.F. Swimming Pool and 165 S.F. of concrete pool equipment pad (no decking as part of this permit). Requires an Enclosure Device for all Single-Family residences. The fence must be at least ...	R- 329 Res Structures Other Than Bldg / New	1855 WESTLAKE DR	Approved	Yes
26	2009-120695 PP	2009-120695 PP	New 2 story SF res w/ att. 3 car garage, attached storage (in garage), attached breezeway (from residence to garage), 1st floor rear cov'd porch, rear 1st floor cov'd terrace over pool, 2nd floor bal ...	R- 101 Single Family Houses / New	1855 WESTLAKE DR	Final	Yes
27	2009-120695 MP	2009-120695 MP	New 2 story SF res w/ att. 3 car garage, attached storage (in garage), attached breezeway (from residence to garage), 1st floor rear cov'd porch, rear 1st floor cov'd terrace over pool, 2nd floor bal ...	R- 101 Single Family Houses / New	1855 WESTLAKE DR	Final	Yes
28	2009-120695 EP	2009-120695 EP	New 2 story SF res w/ att. 3 car garage, attached storage (in garage), attached breezeway (from residence to garage), 1st floor rear cov'd porch, rear 1st floor cov'd terrace over pool, 2nd floor bal ...	R- 101 Single Family Houses / New	1855 WESTLAKE DR	Final	Yes
29	2009-120695 DS	2009-120695 DS	03/30/11 Sidewalk fee paid in lieu of construction. Memo and receipt attached to PR 2009-115889. Construct new sidewalk and driveway approach. See attached variance & pics for Type III approach.**n ...	Res. Driveway / New	1855 WESTLAKE DR	Final	Yes
30	2009-120695 BP	2009-120695 BP	New 2 story SF res w/ att. 3 car garage, attached storage (in garage), attached breezeway (from residence to garage), 1st floor rear cov'd porch, rear 1st floor cov'd terrace over pool, 2nd floor bal ...	R- 101 Single Family Houses / New	1855 WESTLAKE DR	Final	Yes

003/106

	Permit/Case	Reference File Name	Description	Sub Type / Work Type	Project Name	Status	Related Folder
31	2009-115889 PR	2009-115889 PR	New 2 story SF res w/ att. 3 car garage, attached storage (in garage), attached breezeway (from residence to garage), 1st floor rear cov'd porch, rear 1st floor cov'd terrace over pool, 2nd floor bal ...	R- 101 Single Family Houses / New	1855 WESTLAKE DR	Approved	Yes
32	2009-098865 EP	2009-098865 EP	The Construction of a 2-slip 2 Stry boat dock 30' x 22'. A portion of the existing cut in shoreline will be filled in, stabilized and revegetated prior to the construction of the dock.	R- 437 Residential Boat Dock / New	1855 WESTLAKE DR	VOID	Yes
33	2009-098865 BP	2009-098865 BP	The Construction of a 2-slip 2 Stry boat dock 30' x 22'. A portion of the existing cut in shoreline will be filled in, stabilized and revegetated prior to the construction of the dock.	R- 437 Residential Boat Dock / New	1855 WESTLAKE DR	VOID	Yes
34	2009-078064 EV	SP-2008-0435DS		Site Plan /	Christopher Boat Dock	Pending	Yes
35	2009-046173 BP	2009-046173 BP	Demolish a 400 square foot detached garage/workshop structure. **refer to pmt # 2010-056373**	R- 649 Demolition All Other Bldgs Res / Demolition	1855 WESTLAKE DR	VOID	Yes
36	2009-046172 BP	2009-046172 BP	Demolish a circa 1968, 2 story, 2,514 square foot single family residence **refer to pmt # 2010-056372**	R- 645 Demolition One Family Homes / Demolition	1855 WESTLAKE DR	VOID	Yes
37	2009-045091 PR	2009-045091 PR	Demolish a circa 1968, 2 story, 2,514 square foot single family residence AND demolish a 400 square foot detached garage.	R- 645 Demolition One Family Homes / Demolition	1855 WESTLAKE DR	Approved	Yes
38	2009-034023 DA	C8I-2009-0100		Land Status Determination /	1855 WESTLAKE DR	Accepted	No
39	2008-069368 SP	SP-2008-0435DS	The applicant is proposing to construct a boat dock with associated improvements. **2nd submittal**	Site Plan Administrative Small Project / Boat Docks/Shoreline Modification	Christopher Boat Dock	Approved and Released	Yes

003/107

	Permit/Case	Reference File Name	Description	Sub Type / Work Type	Project Name	Status	Related Folder
40	2008-050660 SP	SP-2008-0323DS	The applicant is proposing to construct a boat dock with associated improvements.	Site Plan Administrative Small Project / Boat Docks/Shoreline Modification	Christopher Boat Dock	Expired	No

previous 1 2 3 next **Page 2 / 3 - Total 41 rows returned.**

Back

GIS
Search Type
DEVELOPMENT WEB MAP
Map Tools
Map Themes
1 : 1,200
Map Layers
Address
1 HIDDEN CV, WEST LAKE HILLS, TX
TCAD Profile
2012 True Color
Address Matches
3 Miles

003/108

* Replacing handrail
Add a 15'x20' screen porch to second level
* Site plan showing access to upper level + existing condition of dock

30'x40'

Open deck on second level

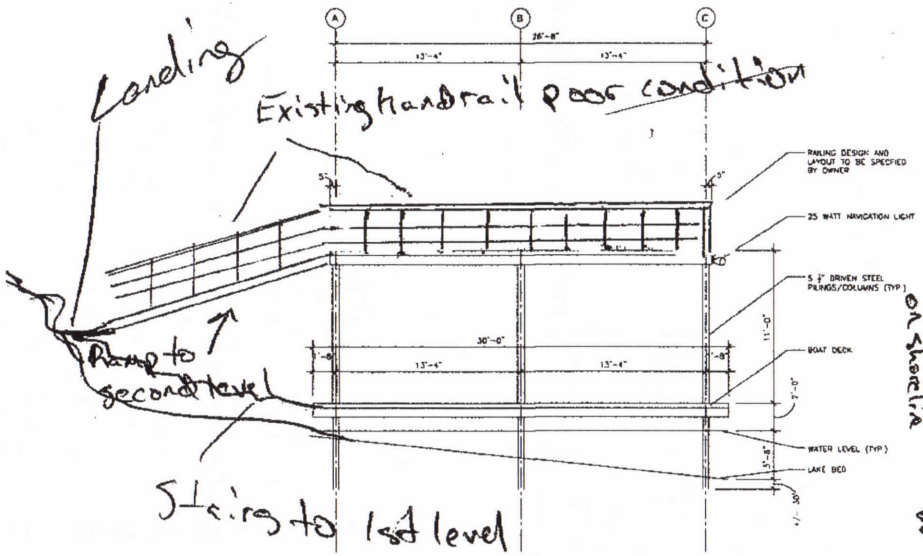

02 SIDE ELEVATION
SCALE: 1/4" = 1'-0"

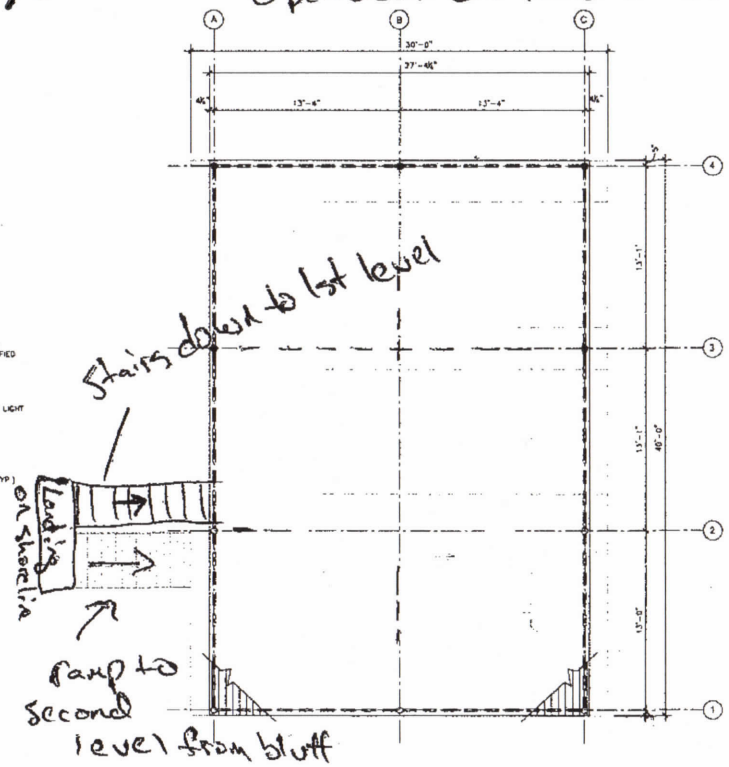

01 2ND FL PLAN VIEW
SCALE: 1/4" = 1'-0"

APPROVAL STAMP

STONE CAD DESIGNS
TEL: 512.787.7455
FAX: 866.268.1810
www.stonecaddesigns.com
KYLE, TX 78640

WHAT'S UP...DOCK
P.O. BOX 1430
DRIPPING SPRINGS, TX 78620
TEL: 512.840.0185
TEL: 512.844.2434

HIDDEN COVE BOAT DOCK
AUSTIN, TEXAS

REVISIONS/CORRECTION:

No.	Date	Description	Approval Signature

DEVELOPMENT PERMIT #

©COPYRIGHT
STONE CAD DESIGNS RESERVES THE COPYRIGHT AND OTHER LEGAL RIGHTS RESTRICTING USE OF THESE DOCUMENTS TO THE ORIGINAL SITE OR PURPOSE FOR WHICH THEY WERE PREPARED. CHANGES, REPRODUCTIONS AND ARRANGEMENTS ARE PROHIBITED WITHOUT PRIOR WRITTEN PERMISSION BY STONE CAD DESIGNS

SHEET
PS201

003/109

* Replacing handrail
Add a 15'x20' screen porch to second level

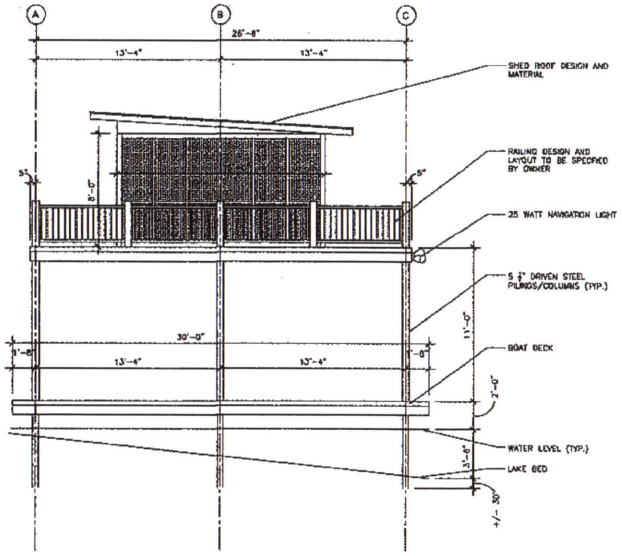

02 SIDE ELEVATION
SCALE: 1/4" = 1'-0"

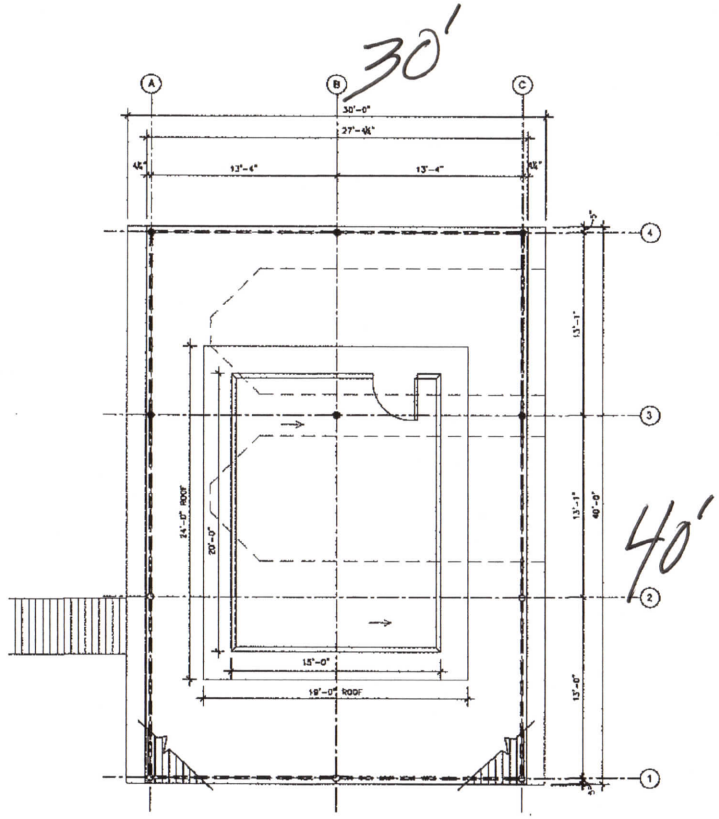

01 2ND FL PLAN VIEW
SCALE: 1/4" = 1'-0"

APPROVAL STAMP

STONE CAD DESIGNS
TEL: 512.787.7455
FAX: 866.268.1810
www.stonecaddesigns.com
KYLE, TX 78640

WHAT'S UP...DOCK
P.O. BOX 1430
DRIPPING SPRINGS, TX 78620
TEL: 512.840.0185
TEL: 512.844.2434

HIDDEN COVE BOAT DOCK
AUSTIN, TEXAS

REVISIONS/CORRECTIONS:

Date:	No.	Page:	Description	Approval Signature
/ /		PS		
/ /		PS		
/ /		PS		
/ /		PS		
/ /		PS		
/ /		PS		
/ /		PS		
/ /		PS		
/ /		PS		
/ /		PS		

DEVELOPMENT PERMIT #

© COPYRIGHT
STONE CAD DESIGNS RESERVES THE COPYRIGHT AND OTHER LEGAL RIGHTS RESTRICTING USE OF THESE DOCUMENTS TO THE ORIGINAL SITE OR PURPOSE FOR WHICH THEY WERE PREPARED. CHANGES, REPRODUCTIONS AND ASSIGNMENTS ARE PROHIBITED WITHOUT PRIOR WRITTEN PERMISSION BY STONE CAD DESIGNS.

SHEET
PS201
PS202

003/110

1 **Page 1 / 1 - Total 9 rows returned.**

To view permit details, click on the Case/Permit Number

PERMIT INFORMATION

	Permit/Case	Reference File Name	Description	Sub Type / Work Type	Project Name	Status	Related Folder
1	2014-120071 EP	2014-120071 EP	replace damaged electric panel next to meter only to existing residence. EUD westlake	Residential / Repair	1 HIDDEN CV	Expired	No
2	2013-019104 EP	2013-019104 EP	Replace handrail upper level. Add a 15'x20' screen porch to top of dock second level. Not changing foot print of dock	Residential / Remodel	1 HIDDEN CV	Final	Yes

00311 of 35

	Permit/Case	Reference File Name	Description	Sub Type / Work Type	Project Name	Status	Related Folder
3	2013-019027 BP	2013-019027 BP	Replace handrail upper level. Add a 15'x20' screen porch to top of dock second level. Not changing foot print of dock	R- 437 Residential Boat Dock / Addition	1 HIDDEN CV	Final	Yes
4	2012-087701 DA	DA-2012-1240	approved Exemption	Site Plan Determination/Exemption /	1 HIdden Cove Boat Dock	Agreed	No
5	2010-072410 EP		amanda created in error***new boat dock (establish existance of boat dock prior to compreshensive watershed ordinane)	R- 437 Residential Boat Dock / New	1 HIDDEN CV	VOID	No
6	2010-072413 EP	2010-072413 EP	new boat dock (West Lake EUD)	Residential / New	1 HIDDEN CV	Final	Yes
7	2010-072410 BP	2010-072410 BP	new boat dock (establish existance of boat dock prior to compreshensive watershed ordinane)(West Lake)	R- 437 Residential Boat Dock / New	1 HIDDEN CV	Final	Yes
8	2010-070268 DA	DA-2010-0904	APPROVED EXEMPTION	Site Plan Determination/Exemption /	BOAT DOCK	Closed	No
9	1982-005606 BP	0225784	Boat Dock	C- 329 Com Structures Other Than Bldg / New	1 Hidden Cove H 00000	VOID	No

1 **Page 1 / 1 - Total 9 rows returned.**

Back

003/1/12 35

GIS
Search Type
DEVELOPMENT WEB MAP
Map Tools
Map Themes
1 : 1,200
Map Layers
Address
1887 WESTLAKE DR, AUSTIN, TX, 7
GO
Map Pan
2012 True Color
Address Matches
(3,098,099.81, 10,081,903.00)
LEGAL DISCLAIMER

003/113

Campion Dock
1887 Westlake Drive

30'X 35.5'

City of Austin
SP-98-0376DS
D
CAMPION BOATDOCK
1887 B WESTLAKE DRIVE

NOTE: NO MODIFICATION OF THE SHORELINE OR OTHER GROUND DISTURBANCE WHICH WOULD INCREASE THE POTENTIAL FOR EROSION/SEDIMENTATION IS ANTICIPATED BY THIS PROJECT. THE CITY OF AUSTIN GENERAL CONSTRUCTION NOTES ARE ATTACHED TO AND MADE A PART OF THIS PROJECT FOR APPLICABILITY IN THE EVENT THAT UNFORESEEN DISTURBANCE OF THE LAND AREA OF THE SITE IS NECESSARY TO COMPLETE THE APPROVED CONSTRUCTION. REFERENCE: EXHIBIT III OF THE BOAT DOCK PACKET (5/24/91) AND SILT FENCE DETAIL, FIGURE 1-8, OF THE ENVIRONMENTAL MANUAL.

NOTE: THIS PROJECT/SITE IS LOCATED IN THE LAKE AUSTIN WATERSHED, IS CLASSIFIED AS WATER SUPPLY RURAL AND SHALL BE DEVELOPED IN ACCORDANCE WITH THE CITY LAND DEVELOPMENT CODE.

DOCK CONTRACTOR: SIGNOR ENTERPRISES, INC.
17912A HAMILTON POOL ROAD
AUSTIN, TX. 78738

OWNER: ALAN CAMPION AND ELLEN BLAIR SMITH

LEGAL ADDRESS: LOT 1, BEE CLIFFS SUBDIVISION
STREET ADDRESS: 1887 WESTLAKE DRIVE
AUSTIN, TX 78746

Construction proposed for Sept./October 98.
Drainage, land erosion, and sedimentation are not affected.
There are no trees 8" or larger within limits of construction.
Pilings shall be steel and primed with PS24 Red Iron Primer.
No Dumpster will be required, all scrap will be placed on barges and recycled.
All work will be done from the water, no tree protection or fiscal surety's required.
No Shoreline modifications nor dredging is proposed.
NOTE: THE ENVIRONMENTAL INSPECTOR WILL BE CONTACTED AT 499-2278 PRIOR TO CONSTRUCTION.

All responsibility for the adequacy of these plans remains with the engineer/designer who prepared them. In approving these plans, the City of Austin must rely on the adequacy of the work of the engineer/designer.

Approved by:
Don C. Perryman
Department of Planning & Development Date

Dev. Permit # SP-98-0376DS
REVIEWED BY:
DATE:

APPROVED
FEB 17 1999
DEVELOPMENT SERVICES

APPROVED
PARKS AND RECREATION BOARD

SURFACE WATER ELEVATION 492.8

DECK ELEVATION 494.8

(2) NAVAGTION LIGHTS: EACH TWO-BULB STATION WILL NOT EXCEED A MAXIMUM 25 WATTAGE FOR BOTH BULBS

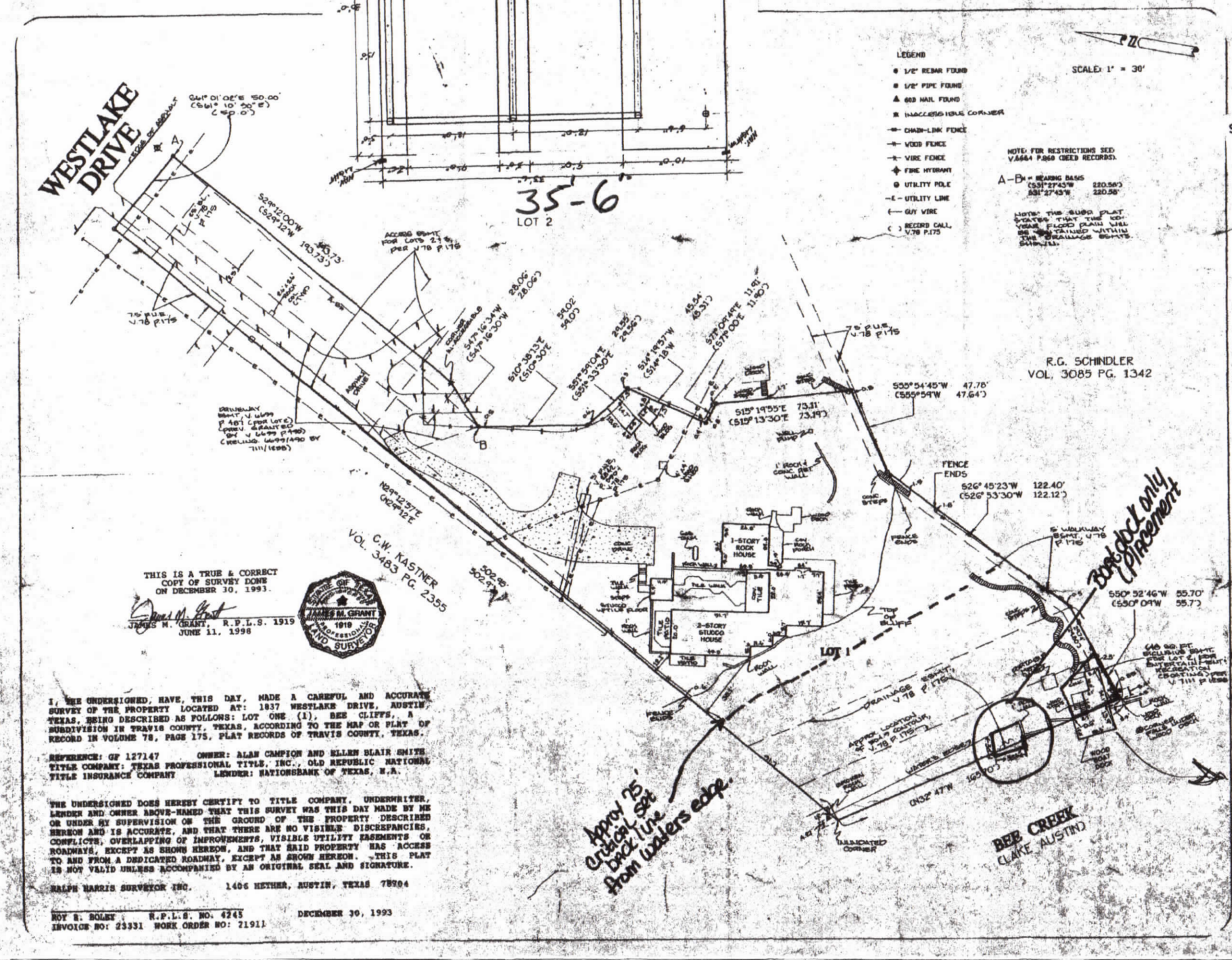

THIS IS A TRUE & CORRECT COPY OF SURVEY DONE ON DECEMBER 30, 1993.
James M. Grant
JAMES M. GRANT, R.P.L.S. 1919
JUNE 11, 1998

I, THE UNDERSIGNED, HAVE, THIS DAY, MADE A CAREFUL AND ACCURATE SURVEY OF THE PROPERTY LOCATED AT: 1837 WESTLAKE DRIVE, AUSTIN, TEXAS, BEING DESCRIBED AS FOLLOWS: LOT ONE (1), BEE CLIFFS, A SUBDIVISION IN TRAVIS COUNTY, TEXAS, ACCORDING TO THE MAP OR PLAT OF RECORD IN VOLUME 78, PAGE 175, PLAT RECORDS OF TRAVIS COUNTY, TEXAS.

REFERENCE: GF 127147 OWNER: ALAN CAMPION AND ELLEN BLAIR SMITH
TITLE COMPANY: TEXAS PROFESSIONAL TITLE, INC., OLD REPUBLIC NATIONAL TITLE INSURANCE COMPANY LENDER: NATIONSBANK OF TEXAS, N.A.

THE UNDERSIGNED DOES HEREBY CERTIFY TO TITLE COMPANY, UNDERWRITER, LENDER AND OWNER ABOVE-NAMED THAT THIS SURVEY WAS THIS DAY MADE BY ME OR UNDER MY SUPERVISION ON THE GROUND OF THE PROPERTY DESCRIBED HEREON AND IS ACCURATE, AND THAT THERE ARE NO VISIBLE DISCREPANCIES, CONFLICTS, OVERLAPPING OF IMPROVEMENTS, VISIBLE UTILITY EASEMENTS OR ROADWAYS, EXCEPT AS SHOWN HEREON, AND THAT SAID PROPERTY HAS ACCESS TO AND FROM A DEDICATED ROADWAY, EXCEPT AS SHOWN HEREON. THIS PLAT IS NOT VALID UNLESS ACCOMPANIED BY AN ORIGINAL SEAL AND SIGNATURE.

RALPH HARRIS SURVEYOR INC. 1406 HETHER, AUSTIN, TEXAS 78704

ROY E. BOLES R.P.L.S. NO. 4245 DECEMBER 30, 1993
INVOICE NO: 23331 WORK ORDER NO: 21911

Side View
(Lot to South)

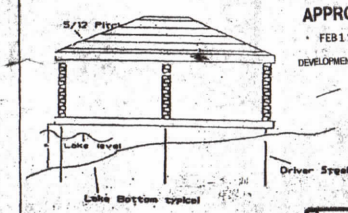

* Remove existing Boatdock prior to construction of new Boatdock.
Kendel K. Scott

004 of 08

003/114 35

003/115

1 **Page 1 / 1 - Total 15 rows returned.**

To view permit details, click on the Case/Permit Number

PERMIT INFORMATION

	Permit/Case	Reference File Name	Description	Sub Type / Work Type	Project Name	Status	Related Folder
1	2017-024181 PP	2017-024181 PP	Install containment RP backflow prevention assembly. Install calibrated pressure relief valve to account for thermal expansion. Test RP assembly and perform CCT.	Residential / Auxiliary Water	1887 WESTLAKE DR	Final	No
2	2017-005704 AUXW	AUXW-2017-0007	Install and test RPZ at meter, allow for thermal expansion, perform CCT, label per DSD	Residential /	1887 WESTLAKE DRIVE	Approved	No
3	2011-032325 MP	2011-032325 MP	Changeout HVAC to exsting resid only	Residential / Remodel	1887 WESTLAKE DR	Expired	No
4	2009-108938 BP	2009-108938 BP	New 2-slip boat dock (Repermit of 99-012710)	R- 437 Residential Boat Dock / New	1887 WESTLAKE DR	Final	No