1.6.9 Guidance for Compliance with Technical Requirements of the SOS Ordinance

1.6.9.1 Introduction

This section is designed to provide guidance for development in the Barton Springs Zone subject to Section 25-8-514 of the Land Development Code. All development subject to these regulations shall demonstrate that average annual stormwater discharge pollutant loads do not exceed the average annual pollutant loads ~~All proposed development in the Barton Springs Zone subject to Section 25-8-514 of the Land Development Code must meet the following criteria for the prevention and abatement of nonpoint source pollution. All development subject to these regulations shall show that it does not discharge pollutant loads in runoff in excess of those~~ produced by the site on the effective date of the project application (existing conditions loads) in accordance with the procedures established in these rules. If water quality controls cannot ~~can not~~ be designed which achieve the required pollutant load reduction to existing ~~baseline~~ levels, impervious cover on the site shall be reduced to the extent necessary to comply with the pollutant load requirement. As indicated below, a combination of structural and non-structural stormwater treatment methods and source control techniques shall be used to comply with the ordinance requirements.

Runoff resulting from areas which store or receive irrigation of wastewater shall meet the pollution reduction requirements of the SOS Ordinance.

These rules are divided into two sections: (1) Pollution Prevention Measures and (2) Control Measure Design. Section 1.6.9.2 ~~The section~~ describes the minimum requirements for pollution prevention techniques. Section 1.6.9.3 ~~The second section~~ describes the methodology for the calculation of existing~~baseline~~ and developed pollutant loads, and the minimum requirements for the design of water quality controls to prevent the increase in these loads above existing~~baseline~~ levels.

*****

1.6.9.3 Control Measure Design

For each site within the Barton Springs Zone, the average annual stormwater pollutant load for the specified pollutants (Section 1.6.9.3.B.1) discharged from a site shall not exceed the existing pollutant load. This is the non-degradation requirement. A series of steps for calculating whether a site's proposed conditions meet non-degradation requirements in the Barton Springs Zone is provided below: ~~The design guidelines provided below establish the procedures for:~~

• Calculating existing condition ~~baseline (undeveloped condition)~~ loads (Section 1.6.9.3.B);

• Calculating developed conditions uncontrolled runoff volume and pollutant concentrations (Section 1.6.9.3.C)

• Identifying the stormwater control measures that are currently approved for use within the Barton Springs Zone (Section 1.6.9.3.D);

• Calculating the effluent pollutant concentration of controls operating in series (Section 1.6.9.3.E);

• Calculating proposed developed condition loads (Section 1.6.9.3.E);

• Determining whether the proposed developed condition load complies with non-degradation requirements (Section 1.6.9.3.F); and

• Evaluating alternative stormwater control measures, if applicable (Section 1.6.9.3.G).

~~• Determining the reduction in pollutant load required to comply with ordinance requirements;~~

~~• Evaluating the water quality controls needed to meet the required reduction;~~

~~• Calculating the combined pollutant removal efficiency of controls operating in series; and~~

~~• Evaluating alternative or innovative stormwater treatment techniques.~~

~~For each site, the average annual pollutant load for the specified pollutants discharged from a site shall not exceed the baseline level calculated in accordance with these procedures established through the Alternative Data Methods described in 1.6.9.3.C. The developed condition load shall be compared to the baseline load from the same area to determine the reduction required to be achieved by the proposed stormwater treatment system(s).~~

For stormwater control measures that do not discharge directly to the surface drainage system (i.e. infiltration measures), ~~runoff treatment systems that are designed not to surface discharge,~~ the proposed treatment methodology shall be designed to meet the pollutant loading reduction requirements for runoff prior to the treated runoff's re-emergence to the surface or entering the local groundwater system.

~~At the applicant's option, areas~~To the maximum extent feasible, areas of the site which are to remain undisturbed and undeveloped should ~~and will~~ not contribute runoff to a proposed developed area ~~or water quality control may be~~ and are excluded from the calculations. Such undeveloped areas must remain in their natural condition and must be protected by a plat note or restrictive covenant referenced on the site plan and filed with the appropriate County to prevent the application of fertilizers or pesticides and to limit the disturbance of the natural areas. The removal of diseased or damaged trees or other plants which pose a hazard to health and safety or which pose a threat to the health of other plants in the area may be allowed, upon review and approval of the Watershed Protection ~~and Development Review~~ Department (WPD~~R~~).

1.6.9.3.A. Definitions

1. Existing conditions

Existing conditions is a reference condition against which to compare proposed future development. Existing conditions refer to the permitted development on the site on the effective date of the project application. If the existing condition of the site is undeveloped, it is also at its baseline condition. However, the site may already contain development. Refer to Section 1.9.2 for the definition of base impervious cover in the Barton Springs Zone.

2. Stormwater Control Measure

All stormwater runoff treatment systems in this section are referred to as stormwater control measures (in short, SCMs or controls). SCMs are also commonly known as best management practices (BMPs).

3. Calculation Variables and Conceptual Layout

The pollutant load calculations in Section 1.6.9.3.B are based on a mass balance on the developed site runoff streams. Figure 3.A.1 shows an example conceptual layout of a site with multiple drainage areas and treatment trains. The applicant may customize the layout for their site by varying: the number of drainage areas, the presence, absence, type, and size of each SCM, and the flow volumes directed to each SCM. Each SCM and treatment train shall comply with requirements listed in Sections 1.6.9, 1.6.7, and other applicable sections.

The goal of the ordinance is to treat all of the developed land. In the event that it is not physically possible to route all developed area runoff to an SCM, the runoff from the remaining developed drainage areas shall be treated to a greater extent such that the entire developed site load meets non-degradation requirements.

(Add new figure 1.6.9.3.A.1)

Figure 1.6.9.3.A.1: Example site showing two developed drainage areas, two SCM treatment trains, and associated calculation variables.

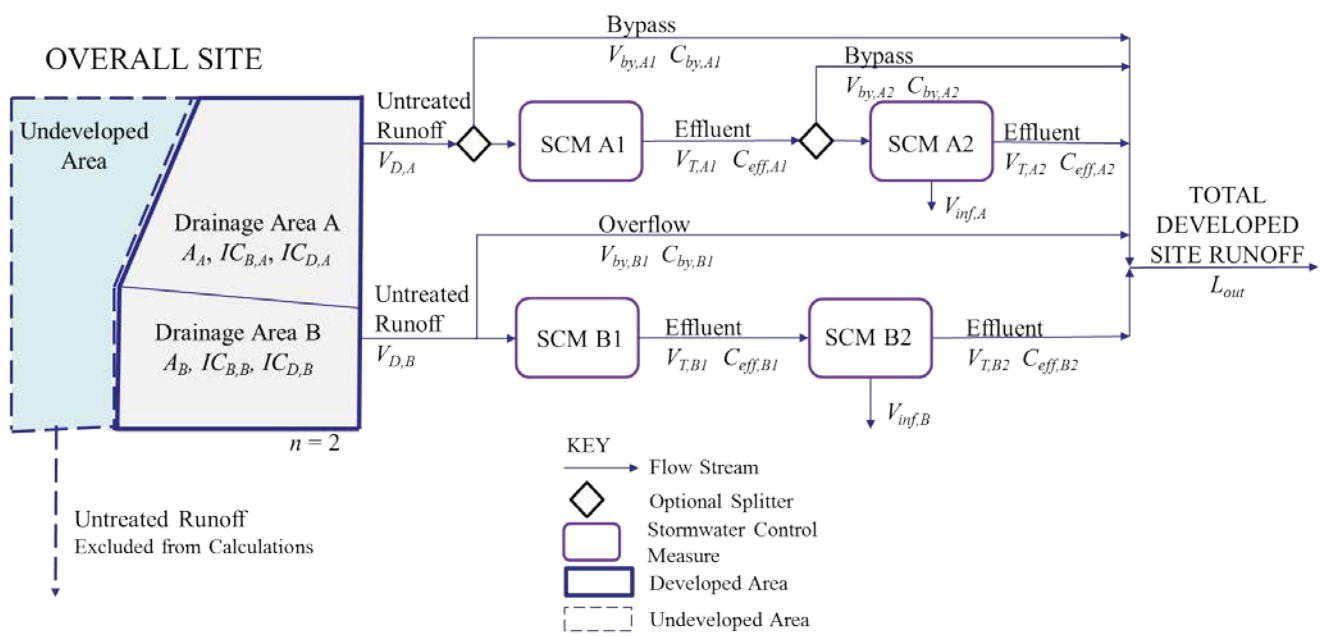

The following list summarizes the variables that will be introduced in the calculation procedure in Sections 1.6.9.3.B through 1.6.9.3.F:

A_{field} = Irrigation field size (Acres)

A_n = Area of each drainage area (Acres)

b = Interevent time (hours)

C_{Ex} = Pollutant concentration for existing conditions (mg/L or CFU/100 mL)

$C_{by,1}$ = Pollutant concentration in flow that bypasses or overflows the first SCM in series (mg/L or CFU/100 mL)

$C_{by,2}$ = Pollutant concentration in flow that bypasses the second SCM in series

C_D = Pollutant concentration for developed conditions (mg/L or CFU/100 mL)

C_{eff} = Treated surface effluent concentration for each pollutant (mg/L or CFU/100 mL)

C_i = The concentration associated with the ith flow stream (mg/L or CFU/100 mL)

$C_{inf,2}$ = Infiltrated concentration for each pollutant for the second SCM in series (mg/L or CFU/100mL)

CF = Conversion factor

For pollutant in mg/L *CF* = 0.2267 [lb-L/(mg-Ac-in)]

For pollutant in CFU/100 mL *CF* = 1.0279 [100 mL/(Ac-in)]

DDT = Drawdown time, or time for control to empty its full water quality volume, starting at the beginning of drawdown (hours)

I = Field-verified infiltration rate (in/hr)

IC_B = Base impervious cover (percentage, 0 to 100)

IC_D = Developed impervious cover (percentage, 0 to 100)

LEF_p = Load equivalency factor for pollutant *p* (unitless)

L_{Ex} = Existing pollutant load (lb/yr or 10^6 CFU/yr)

L_n = the load of each pollutant in the runoff for a single drainage area *n* (lb/yr or 10^6 CFU/yr)

L_{out} = the annual pollutant load off the site (lb/yr or 10^6 CFU/yr)

m = peak discharge multiplication factor (unitless)

n = Drainage area ID number

n_z = Number of application zones where irrigation is alternated

n_{max} = Total number of distinct drainage areas on the site

p = pollutant ID

RCE = Runoff Capture Efficiency, or percent of total drainage area runoff that is captured on an average annual basis (%)

RCE_{inf} = Runoff capture efficiency for infiltrated (or reused) volume on an annual average basis (%)

R_v = Runoff-rainfall ratio (unitless)

S_d = Depression storage (inches)

t = mean annual rainfall event duration (hours)

t_D = drain time for full control to empty, starting at end of rain event (hours)

LT = lag time between end of rain event and beginning of drawdown (hours)

v = mean annual rainfall event volume (inches)

$V_{by,1}$ = Annual bypassed/untreated runoff volume (in/yr)

$V_{by,2}$ = Annual runoff volume treated by SCM 1 but bypassing SCM 2 (in/yr)

V_D = Developed annual runoff volume (in/yr)

V_{Ex} = Existing annual runoff volume (in/yr)

V_i = The volume associated with the ith flow stream (in/yr)

V_{inf} = Annual average volume that is infiltrated (or reused) (in/yr)

$V_{T,1}$ = Annual average runoff volume treated by the first SCM in series (in/yr)

$V_{T,2}$ = Annual average runoff volume treated by SCM 2 but not infiltrated (or reused) (in/yr)

WQV = Water quality volume, or storage volume in SCM 1, normalized to the drainage area (inches)

WQV_{inf} =Infiltrated (or reused) water quality volume normalized to the drainage area (inches)

~~A. **Baseline Pollutant Load Calculations.**~~

1.6.9.3.B. Calculating Pollutant Load for Existing Conditions

1. Pollutants

Existing and developed ~~Baseline (i.e. background or undeveloped)~~ pollutant loads shall be calculated for ~~all areas which are to be developed for the following pollutants~~ the following pollutant species:

~~Total Suspended Solids TSS~~
~~Total Phosphorus TP~~
~~Total Nitrogen TN~~
~~Chemical Oxygen Demand COD~~
~~Biochemical Oxygen Demand BOD~~
~~Total Lead Pb~~

~~Fecal Coliform FC~~
~~Fecal Streptococci FS~~
~~Total Organic Carbon TOC~~

Escherichia coli, (EC)

Chemical Oxygen Demand (COD)

Total Lead (Pb)

Total Nitrogen (TN)

Total Phosphorus (TP)

Total Suspended Solids (TSS)

Total Zinc (Zn)

~~In addition, because there is a correlation between the levels of cadmium (Cd) and zinc (Zn) in both natural and processed states, it must be demonstrated that there will be no increase in the average annual load of zinc from the developed site.~~ Although cadmium (Cd) is also a pollutant of concern, cadmium levels are typically lower than City of Austin monitoring detection limits. Therefore there is insufficient monitoring data to publish cadmium runoff concentrations. Zinc is more easily detected, therefore zinc (Zn) concentrations are calculated to determine compliance. See Section 1.6.9.2.B for additional cadmium requirements.

2. Drainage Areas

Each site shall be subdivided into one or more drainage areas. Pollutant load calculations shall be provided for ~~the~~each drainage area that contains any development, including both impervious and pervious cover, regardless of whether it drains to proposed stormwater control measures or ~~contributing to each water quality control which is proposed for the project and for each drainage area which contains development and~~ does not drain to any stormwater control measure ~~a control~~. The following variables shall correspond to each drainage area:

A_n = Area of drainage area (Acres)

n = Drainage area ID number

Flows from off-site as well as undeveloped areas ~~which could contribute to a water quality control may~~ should be diverted around proposed developed drainage areas~~areas of proposed development~~. Such diversions may be constructed as open waterways or closed conduits. If swales or berms are used, they must be revegetated and located such that they do not receive on-site flow from developed areas. If flows from off-site and undeveloped areas are not diverted, the total contributing area must be considered when calculating the existing~~baseline~~ load, developed load, and volume to be captured and treated. However, undeveloped and offsite areas shall not be used to decrease average impervious cover percentage of the drainage area. Where a drainage area must include off-site drainage, the water quality

volume associated with the drainage area shall be no less than the required water quality volume for the developed area alone.

3. Base Impervious Cover

Each drainage area has an associated base impervious cover, which is defined in Section 1.9.2. Note that base impervious cover may be 0% if the site is undeveloped, or it may be greater than 0%.

IC_B = Base impervious cover (percentage, 0 to 100)

4. Existing Runoff

Each drainage area has an associated existing yearly runoff, which can be interpolated from Table 1-9, below. The table was developed from monitoring data collected and analyzed by the City of Austin. From the data, correlations were developed which relate a site's impervious cover to its runoff-rainfall ratio, R_v, and depression storage, S_d (Glick et al 2009). Through an additional procedure (Adams & Papa, 2000) these variables were further correlated to annual runoff volume, V, as a function of impervious cover.

~~Average annual rainfall/runoff curves have been developed based on local and national data for development projects subject to the SOS regulations. Separate curves are provided for sites located in the Edwards Aquifer Recharge Zone and in the Contributing Zone. These curves and a tabulation of rainfall/runoff ratios are shown in Figure 1-60 in Appendix V of this manual and Table 1-9, respectively.~~

V_{Ex} = Existing annual runoff volume, a function of IC_B (in/yr)

(Add new table 1-9)

Table 1-9: Yearly Runoff as a Function of Impervious Cover.

Impervious Cover, *IC* (%)	Runoff-Rainfall Ratio, R_v	Depression Storage, S_d (in)	Annual Number of Runoff Events, θ	Annual Runoff, *V* (in/yr)
0	0.064	0.218	46	1.18
5	0.1	0.198	48.4	1.94
10	0.136	0.18	50.6	2.76
15	0.172	0.163	52.8	3.63
20	0.208	0.148	54.8	4.55
25	0.243	0.134	56.7	5.52
30	0.279	0.122	58.5	6.54
35	0.315	0.11	60.2	7.59
40	0.351	0.1	61.8	8.67
45	0.387	0.091	63.2	9.78
50	0.423	0.082	64.6	10.91
55	0.458	0.075	65.8	12.06
60	0.494	0.068	66.9	13.23
65	0.53	0.062	68	14.42
70	0.566	0.056	69	15.61
75	0.602	0.051	69.9	16.82
80	0.637	0.046	70.7	18.03
85	0.673	0.042	71.5	19.24
90	0.709	0.038	72.2	20.46
95	0.745	0.034	72.8	21.69
100	0.781	0.031	73.4	22.91
Austin Total	--	--	79.3	31.7

Source: COA WPD, CM-09-03.

5. Pollutant Concentration

Each drainage area has an associated existing pollutant concentration. The standard ~~baseline~~ concentrations for the 7~~10~~ pollutants, based on local monitoring data collected and analyzed by the City of Austin, are shown in Table 1-10, below. When determining pollutant concentrations, the applicant shall use column A for all cases where any development exists, including where the development is pervious (i.e. landscaped areas), and column B only where the site has no existing development. ~~Unit area baseline pollutant loads concentrations (B_p) have been determined using the pollutant concentrations shown in Table 1-10 and the rainfall-runoff curves shown in Figure 1-60 in Appendix V of this manual and Table 1-9 using the following equation~~:

~~**Equation 1**:~~

~~$B_p = R_f(32.5)(C)(0.2267)$, where~~

~~B_p = unit area pollutant baseline load in pounds/acre/year~~

~~R_f = rainfall-runoff coefficient for undeveloped sites (5% I.C.) from Table 1-9~~

~~32.5 = annual rainfall in inches~~

~~C = concentration of pollutant in mg/l~~

~~0.2267 = conversion factor~~

~~For the Fecal Coliform (FC) and Fecal Streptococci (FS) parameters, the same equation is used, except the following values are substituted:~~

~~B_p = unit area baseline pollutant load in colonies/acre/year~~

~~C = colonies per 100 ml~~

~~1.028×10^6 = conversion factor~~

~~The standard baseline loads for the ten pollutants for undeveloped sites in both the Recharge and Contributing Zones are shown in Table 1-10, also.~~

~~For sites or portions of sites which at the time of application are developed, baselineloads shall be calculated using the methodology shown in Section 1.6.9.3.B. below and shall consider any existing stormwater treatment systems on the site. Where alternative or site specific data is to be used in calculating baseline loads, the applicant shall comply with the requirements of Section 1.6.9.3.C., Alternative Data, below.~~

C_{Ex} = Pollutant concentration for existing conditions (mg/L or CFU/100 mL)

(Add new table 1-10)

Table 1-10: Pollutant Concentrations in Surface Runoff

Pollutant, *i*		**Pollutant Concentration, C_{Ex} or C_D**	
		A **Site Contains Development (*IC* ≥ 0%)**	**B** **Site Completely Undeveloped (*IC* = 0%)**
COD	mg/L	= 38.9 + 66.6·*IC*	38.9
E. coli	CFU/100 mL	25000	8370
Pb	mg/L	= 0.00428·exp(2.42·*IC*)	0.00428
TN	mg/L	2.22	1.19
TP	mg/L	0.396	0.124
TSS	mg/L	166	166
Zn	mg/L	= 0.0236·exp(2.18·*IC*)	0.0236

Source: COA WPD, CM-09-03.

6. Pollutant Load

To calculate the existing pollutant load, evaluate Equation 1 for each of the seven pollutant species for each drainage area.

$L_{Ex} = C_{Ex} \cdot V_{Ex} \cdot A_n \cdot CF$ **(Equation 1)**

Where:

L_{Ex} = Existing pollutant load (lb/yr or 10^6 CFU/yr)

C_{Ex} = Pollutant concentration for existing conditions (mg/L or CFU/100 mL), see Section 1.6.9.3.B.5

V_{Ex} = Existing annual runoff volume (in/yr), See Section 1.6.9.3.B.4

A_n = Area of drainage area (Acres), see Section 1.6.9.3.B.2

CF = Conversion factor

CF (pollutant in mg/L) = 0.2267 (lb-L/mg-Ac-in)

CF (pollutant in CFU/100 mL) = 1.0279 (100 mL/Ac-in)

~~B. **Developed Condition Pollutant Load Calculations.**~~

1.6.9.3.C. Calculating the Developed Conditions Runoff Volume and Pollutant Concentrations

1. Impervious Cover

Calculation~~s~~ of developed condition pollutant loads must use the same drainage area used to determine the existing conditions ~~baseline~~ loads. Within each drainage area, the total developed impervious cover will be determined as a percent of the gross drainage area. All developed areas, including areas of impervious cover, lawns, landscaping, gardens, and other maintained pervious areas, shall be included in the developed impervious cover percentage calculation and should be routed to a control. Existing or restored natural areas which are restricted from development, and pesticide, herbicide, or fertilizer application through a plat note or restrictive covenant shall be excluded from the drainage area and associated impervious cover calculations; refer to Section 1.6.9.3.B.2. ~~Where a vegetated filter strip is proposed as a water quality control, the area of the filter strip shall be excluded from the area used in calculating the impervious cover of the contributing drainage area.~~

IC_D = Developed impervious cover (percentage, 0 to 100)

~~The standard pollutant concentrations for three land use types to be used in calculating the developed condition pollutant loads are shown in Table 1-11. Concentrations are shown for two ranges of impervious cover - from 0 to 15 percent and greater than 15 percent impervious cover - to account for the pollutant mitigation that may occur when impervious surfaces discharge runoff to adjacent permeable areas in areas of low impervious cover.~~

~~Where alternative or site specific data is to be used in calculating developed loads, the applicant shall comply with the requirements of Section 1.6.9.3.C., Alternative Data, below.~~

~~**TABLE 1-9**~~
~~**RUNOFF COEFFICIENT TABLE**~~

~~**Impervious Cover**~~	~~**Non-Recharge Zone Runoff**~~	~~**Recharge Zone Runoff**~~
~~0.05~~	~~0.049~~	~~0.025~~
~~0.10~~	~~0.068~~	~~0.043~~
~~0.15~~	~~0.091~~	~~0.064~~
~~0.20~~	~~0.116~~	~~0.089~~
~~0.25~~	~~0.145~~	~~0.117~~
~~0.30~~	~~0.176~~	~~0.148~~

~~0.35~~	~~0.211~~	~~0.183~~
~~0.40~~	~~0.248~~	~~0.22~~
~~0.45~~	~~0.288~~	~~0.261~~
~~0.50~~	~~0.33~~	~~0.304~~
~~0.55~~	~~0.376~~	~~0.351~~
~~0.60~~	~~0.424~~	~~0.401~~
~~0.65~~	~~0.474~~	~~0.453~~
~~0.70~~	~~0.528~~	~~0.509~~
~~0.75~~	~~0.583~~	~~0.567~~
~~0.80~~	~~0.642~~	~~0.628~~
~~0.85~~	~~0.703~~	~~0.692~~
~~0.90~~	~~0.766~~	~~0.759~~

~~Prepared by the City of Austin Watershed Protection Department, 1993~~

~~TABLE 1-10~~

~~BASELINE POLLUTANT CONCENTRATIONS AND UNIT AREA LOADS FOR UNDEVELOPED SITES~~

~~Pollutant~~	**~~Concentration~~**	**~~Unit Area Load (B_p)~~**	
		~~Recharge~~	**~~Non-Recharge~~**
~~TSS~~	~~55~~	~~10.1~~	~~19.9~~
~~TP~~	~~0.04~~	~~0.007~~	~~0.014~~
~~TN~~	~~0.54~~	~~0.10~~	~~0.20~~
~~COD~~	~~22~~	~~4.1~~	~~7.9~~
~~BOD~~	~~8~~	~~1.5~~	~~2.9~~

~~Pb~~	~~0.003~~	~~0.0006~~	~~0.0011~~
~~FC~~	~~4000~~	~~3.34×10^9~~	~~6.55×10^9~~
~~FS~~	~~3000~~	~~2.51×10^9~~	~~4.91×10^9~~
~~TOC~~	~~6~~	~~1.1~~	~~2.2~~
~~Zn~~	~~0.008~~	~~0.0015~~	~~0.0029~~

~~Notes:~~
~~1. Concentrations in mg/l, except FC and FS which are in colonies/100 ml~~
~~2. Unit Loads in lbs/acre/year, except FC and FS which are in colonies/acre/year~~
~~3. Concentrations from "Stormwater Pollutant Loading Characteristics for Various Land Uses in the Austin Area"; March 1990; City of Austin, WPDR.~~

~~The baseline pollutant load within each drainage area will be calculated as shown in the following equation:~~

~~Equation 2:~~

~~$U_p = A \times B_p$, where~~

~~U_p = Total annual baseline pollutant load for pollutant "P" in pounds or colonies~~

~~A = Drainage area in acres~~

~~B_p = Unit area baseline annual pollutant load for pollutant "P" in pounds or colonies per acre from Table 1-10~~

~~TABLE 1-11~~
~~STANDARD POLLUTANT CONCENTRATIONS FOR DEVELOPED SITES~~

~~Pollutant~~	**~~Single Family/Dup.~~**		**~~Multi-Family~~**		**~~Commercial~~**	
	~~0-15% IC~~	**~~>15% IC~~**	**~~0-15% IC~~**	**~~>15% IC~~**	**~~0-15% IC~~**	**~~>15 IC~~**
~~TSS~~	~~82.5~~	~~110~~	~~82.5~~	~~110~~	~~82.5~~	~~110~~
~~TP~~	~~0.10~~	~~0.16~~	~~0.10~~	~~0.16~~	~~0.10~~	~~0.16~~
~~TN~~	~~1.27~~	~~2.00~~	~~0.97~~	~~1.40~~	~~1.18~~	~~1.82~~
~~COD~~	~~28.5~~	~~35~~	~~28.5~~	~~35~~	~~50.5~~	~~79~~

~~BOD~~	~~8~~	~~8~~	~~8~~	~~8~~	~~8~~	~~8~~
~~Pb~~	~~0.012~~	~~0.02~~	~~0.012~~	~~0.02~~	~~0.017~~	~~0.03~~
~~FC~~	~~6,200~~	~~8,400~~	~~6,200~~	~~8,400~~	~~21,500~~	~~39,000~~
~~FS~~	~~7,000~~	~~11,000~~	~~7,000~~	~~11,000~~	~~24,500~~	~~46,000~~
~~TOC~~	~~7.5~~	~~9~~	~~7.5~~	~~9~~	~~12.5~~	~~19~~
~~Zn~~	~~0.024~~	~~0.04~~	~~0.24~~	~~0.04~~	~~0.029~~	~~0.05~~

~~Notes:~~
~~1. Concentrations in mg/l, except FC and FS which are in colonies/100 ml~~
~~2. Concentrations from "Stormwater Pollutant Loading Characteristics for Various Land Uses in the Austin Area"; March 1990; City of Austin, WPDR.~~

~~The developed condition unit area pollutant loads (Dp) shall be calculated for each drainage area based on the level of gross impervious cover using Equation 3, below:~~

~~**Equation 3:**~~

~~$D_p = R_f(32.5)(C)(0.2267)$, where~~

~~D_p = unit area pollutant developed load in pounds/acre/year~~

~~R_f = rainfall runoff coefficient from Table 1-9~~

~~32.5 = annual rainfall in inches~~

~~C = concentration of pollutant in mg/1~~

~~0.2267 = conversion factor~~

~~For the Fecal Coliform (FC) and Fecal Streptococci (FS) parameters, the same equation is used, except the following values are substituted:~~

~~D_p = unit area developed pollutant load in colonies/acre/year~~

~~C = colonies per 100 ml~~

~~1.028×10^6 = conversion factor~~

~~Total pollutant loads for a developed drainage area shall be calculated using the following equation:~~

~~**Equation 4:**~~

~~$T_p = A \times D_p$, where~~

~~T_P = Total annual developed condition pollutant load for pollutant "P" in pounds or colonies~~

~~A = Developed area in acres~~

~~D_P = Developed condition unit area annual pollutant load for pollutant "P" in pounds or colonies per acre~~

2. Runoff

Each developed drainage area has an associated annual average runoff volume that is a function of the developed impervious cover. This value can be interpolated from Table 1-9, above.

V_D = Developed annual runoff volume (in/yr), a function of IC_D

3. Pollutant Concentration

The runoff from each developed drainage area, prior to treatment by any control, has an associated pollutant concentration for developed conditions. This concentration can be found in Column A of Table 1-10, above.

C_D = Pollutant concentration for developed conditions (mg/L or CFU/100 mL)

1.6.9.3.D. Determining Treatment Volumes

1. Approved Stormwater Control Measures (SCMs)

For each drainage area, the stormwater control measures shall be designed as two SCMs in series. The first shall be a volume retention-type control that does not allow infiltration per state of Texas regulations. The second shall be a volume reduction-type control; volume reduction, such as by infiltration, is generally the only practical way to achieve non-degradation criteria. Approved SCMs that can be used to treat the runoff from each drainage area are the following:

- First control in series (SCM 1):
    - Sedimentation/filtration (see Section 1.6.7.C)
    - Retention basin (see Section 1.6.7.A)
    - Rainwater cistern (see Section 1.6.7.D)
    - Biofiltration (see Section 1.6.7.H)
    - Alternative, approved SCM (see Section 1.6.9.3.G)
- Second control in series (SCM 2):
    - Infiltration field (see Section 1.6.7.A and 1.6.7.D)

- Beneficial reuse (typically following a rainwater cistern)
- Alternative, approved SCM (see Section 1.6.9.3.G)

SCM 1 shall be designed such that the full capture volume is released over a minimum 48 hour period. This allows better treatment of VOCs, pesticides, herbicides, and other toxic pollutants. Where basins are required to have liners, such liners shall be designed in accordance with the criteria in Section 1.6.5.D.3 of the Environmental Criteria Manual.

Beneficial reuse includes other volume reduction techniques that result in less runoff discharged offsite. Examples include plumbing for non-potable uses such as toilet flushing or irrigation of a landscaped area. If selecting this option, the applicant shall provide calculations that quantify the volume reduction on an average annual basis.

Water shall be applied to infiltration fields through either irrigation, designed per Section 1.6.7.A, or level-spreading, designed per Section 1.6.7.D. Water from SCM 1 can be conveyed to the infiltration field through pumping or, in cases where site topography allows, gravity drainage. Infiltration fields shall be located to avoid impacts to existing springs and other Critical Environmental Features, including impacts resulting from the discharge of inadequately treated runoff at such locations.

Infiltration fields shall be designed and sized such that there is no runoff of the applied water from the infiltration field. Application of water from SCM 1 onto the infiltration field shall not commence until a minimum of 12 hours after rainfall ends. This is known as the lag time, t_L. However, systems that satisfy all of the following do not require the 12 hour lag time:

(1) Use a sedimentation/filtration basin for SCM 1

(2) Gravity-drain to the infiltration field

(3) Include measures to ensure infiltration of the entire water quality volume, such as berms a maximum of six inches high and that contain two inches of freeboard.

Where higher treatment levels are proposed in one drainage area to compensate for lower treatment levels in another drainage area on the same site, the applicant shall provide information which shows the following:

- The discharge from the area with lower treatment is within the same named watershed as the discharge which provides higher load removal and that the confluence of the discharges occurs within ½ mile of the site;
- No significant recharge features are present in the receiving waterway below the area with lower pollutant load removal and prior to the confluence with the waterway which drains the area with better treated runoff.

Development within the Barton Springs Zone must meet the guidelines in other areas of the ECM such as Section 1.6.7, plus the guidelines listed in Section 1.6.9. Where design guidelines within the ECM conflict, the guidelines in Section 1.6.9 shall take precedence for development.

2. Treatment Volume for First SCM in Series

The runoff capture efficiency (RCE) is the annual average percent of runoff that is captured by a control, considering all storm events. To determine the RCE for SCM 1, the applicant shall either use the equations presented below, perform an independent engineering analysis, or use the City of Austin's Stormwater Load Analysis Tool (SLAT), which is available at the Watershed Protection Department's stormwater management web page (www.austintexas.gov/department/stormwater-management).

Equation 2.A is an expression for runoff capture efficiency that was derived using a probabilistic methodology (Adams & Papa, 2000). In this expression, the runoff capture efficiency is a function of the SCM water quality volume, the SCM drain time, rainfall/runoff variables listed in Table 1-9, and rainfall statistics from a period of record. These rainfall statistics are mean annual rainfall event volume *v*, mean annual event duration *t*, and interevent time *b* and are further defined below.

(Add new equation as a figure)

$$RCE = 1 - \frac{t_D}{t_D + \frac{t \cdot WQV}{v \cdot R_v}} * \frac{\left(\frac{t_D}{b \cdot WQV}\right) + \left(\frac{1}{v \cdot R_v}\right)\exp\left[-\left(\frac{t_D}{b \cdot WQV} + \frac{1}{v \cdot R_v}\right)WQV\right]}{\frac{t_D}{b \cdot WQV} + \frac{1}{v \cdot R_v}} \exp\left(\frac{-S_d}{v}\right)$$

(Equation 2.A)

Where:

RCE = Runoff capture efficiency, or percent of drainage area runoff that is captured, on an average annual basis (%)

v = mean annual rainfall event volume = 0.40 inches

t = mean annual rainfall event duration = 5.77 hours

b = interevent time = 103.63 hours

t_D = *DDT* + *LT* = drain time for full control to empty, starting at end of rain event (hours)

Where:

DDT = Drawdown time, or time for control to empty its full water quality volume, starting at beginning of drawdown (hours)

LT = lag time between end of rain event and beginning of drawdown (hours) (See Section 1.6.9.3.D.1)

R_v = Runoff-rainfall ratio (unitless) (See Table 1-9)

S_d = Depression storage (inches) (See Table 1-9)

WQV = Water quality volume, or storage volume in SCM available to capture runoff normalized to the drainage area (inches)

Typically, the water quality volume is first assumed or iteratively calculated (see Section 1.6.9.3.F).

To calculate the runoff volume treated by SCM 1 on an annual basis, evaluate Equation 3.A:

$V_{T,1} = RCE \cdot V_D$ **(Equation 3.A)**

Where:

$V_{T,1}$ = Average annual runoff volume treated by the first SCM in series (in/yr)

RCE = Runoff capture efficiency (%), see Section 1.6.9.3.D.2

V_D = Developed annual runoff volume (in/yr), see Section 1.6.9.3.C.2

3. Treatment Volume for SCM 2

Unless proposing a non-volume reduction-based alternative, SCM 2 reduces runoff volume by infiltrating or irrigating into the soil, or reusing water that later joins the sanitary sewer system. Pollutants associated with the infiltrated volume are assumed to pass through sufficient soil to achieve undeveloped concentrations.

The infiltrated (or reused) water quality volume, WQV_{inf}, is the maximum volume of water that is infiltrated (or reused) over the drawdown period of SCM 1, normalized to the drainage area. The designer typically selects WQV_{inf}.

Often, WQV_{inf} is equal to the water quality volume of the first control, *WQV*, and in this case the average annual volume infiltrated (or reused), V_{inf} , is equal to the average annual treated volume of SCM 1, $V_{T,1}$ (see Section 1.6.9.3.D.2). However, WQV_{inf} can be less than *WQV* depending on design criteria, for example, a limited infiltration field area or a slow rate of beneficial reuse.

The average annual volume infiltrated (or reused), V_{inf}, can be calculated using the same method as $V_{T,1}$ but replacing *WQV* with WQV_{inf} as shown in Equations 2.B and 3.B:

$$RCE_{inf} = 1 - \frac{t_D}{t_D + \frac{t \cdot WQV_{\inf}}{v \cdot R_v}} * \frac{\left(\frac{t_D}{b \cdot WQV_{\inf}}\right) + \left(\frac{1}{v \cdot R_v}\right) \exp\left[-\left(\frac{t_D}{b \cdot WQV} + \frac{1}{v \cdot R_v}\right) WQV_{\inf}\right]}{\frac{t_D}{b \cdot WQV_{\inf}} + \frac{1}{v \cdot R_v}} \exp\left(\frac{-S_d}{v}\right)$$

(Equation 2.B)

Where:

RCE_{inf} = Runoff capture efficiency for infiltrated (or reused) volume on an average annual basis (%)

v = mean annual rainfall event volume (See Section 1.6.9.3.D.2)

t = mean annual rainfall event duration (See Section 1.6.9.3.D.2)

b = interevent time (See Section 1.6.9.3.D.2)

t_D = drain time (total time for full control to empty) (See Section 1.6.9.3.D.2)

R_v = Runoff-rainfall ratio (unitless) (See Table 1-9)

S_d = depression storage (inches) (See Table 1-9)

WQV_{inf} = Infiltrated (or reused) water quality volume normalized to the drainage area (inches)

Equation 3.A is then re-evaluated using RCE_{inf} instead of RCE and becomes Equation 3.B:

$V_{inf} = RCE_{inf} \cdot V_D$ **(Equation 3.B)**

Where:

V_{inf} = Annual average runoff volume that is infiltrated (or reused) (in/yr)

RCE_{inf} = Runoff capture efficiency for infiltrated (or reused) volume on an annual average basis (%)

V_D = Developed annual runoff volume (in/yr), see Section 1.6.9.3.C.2

If using an infiltration (or irrigation) field, the infiltrated water quality volume is related to field area by Equation 4. Equation 4 is based on the expressions in Section 1.6.7.D but has been modified to fit the variable definitions of Section 1.6.9. The expression assumes minimal ponding over the infiltration area, and thus, the infiltrated water quality volume is a function of the soil properties, field area, and application rate. For irrigated systems, the application rate is assumed to be a constant irrigation rate of WQV_{inf} / DDT. For gravity-draining systems, the application rate is assumed to be an average of WQV_{inf} / DDT. If instantaneous application rates exceed the average, the field shall include design measures, such as low berms, to ensure that there is no excess runoff (see Section 1.6.9.3.D.1).

(Insert Equation 4 as a graphic)

$$A_{field} = \frac{WQV_{inf} \cdot n_z}{DDT \cdot I} A_n$$

(Equation 4)

Where:

A_{field} = Irrigation field size (Acres)

WQV_{inf} = Infiltrated (or reused) water quality volume normalized to the drainage area (inches)

n_z = number of application zones where irrigation is alternated (usually 2 for typical retention/irrigation)

DDT = Drawdown time, or time for first control to empty its full water quality volume, starting at the beginning of drawdown (hours)

I = Field-verified infiltration rate (in/hr) (See ECM Section 1.6.7.4)

A_n = Area of each drainage area (acres) (See Section 1.6.9.3.C)

If SCM 2 does not infiltrate 100% of the volume, i.e. it has overflow on an average annual basis or is a non-infiltration-based alternative SCM, then the effluent load of the non-infiltrated component is included in the load calculations. The non-infiltrated volume, $V_{T,2}$, shall be determined with Equation 5, which assumes that no bypass from SCM 1 is routed to SCM 2. If this assumption is not met, the volume shall be calculated independently such as with a continuous simulation model.

$V_{T,2} = V_{T,1} - V_{inf}$ **(Equation 5)**

Where:

$V_{T,2}$ = Annual average runoff volume treated by SCM 2 but not infiltrated or reused (in/yr)

$V_{T,1}$ = Average annual runoff volume treated by the first SCM in series (in/yr) (See Section 1.6.9.3.D.2)

V_{inf} = Annual average volume that is infiltrated (or reused) (in/yr) (See Equation 3.b)

4. Bypass Volume

A portion of the runoff volume may bypass or overflow both the first and second SCM, thus remaining untreated. To calculate the annual average bypass volume which is not treated by any SCM, use a continuous simulation model or SLAT. For a typical configuration where two SCMs in series treat the same drainage area, Equation 6 can be used to find this bypass volume:

$V_{by,1} = V_D - V_{T,1}$ **(Equation 6)**

Where:

$V_{by,1}$ = Annual bypassed/untreated runoff volume (in/yr)

V_D = Developed annual runoff volume (in/yr), see Section 1.6.9.3.C.2

$V_{T,1}$ = Annual average runoff volume treated by the first SCM in series (in/yr), see Equation 3.A

The treatment train design may divert a portion of the SCM 1 effluent offsite, bypassing SCM 2. To determine the annual average runoff volume that is treated only by SCM 1 before running offsite$V_{by,2}$, evaluate Equation 7, which assumes that two SCMs in series treat the same drainage area:

$V_{by,2} = V_{T,1} - V_{T,2} - V_{inf}$ **(Equation 7)**

Where:

$V_{by,2}$ = Annual runoff volume treated by SCM-1 but bypassing SCM 2(in/yr)

$V_{T,1}$ = Annual average volume treated by the first SCM in series (in/yr), see Equation 2

$V_{T,2}$ = Annual average runoff volume treated but not infiltrated (or reused) by SCM 2 (in/yr), see Section 1.6.9.3.D.3

V_{inf} = Annual average volume that is infiltrated (or reused) (in/yr), see Section 1.6.9.3.D.3

1.6.9.3.E. Calculate the Pollutant Load for the Developed Site with Controls

1. Treated Effluent Pollutant Concentrations

Each volume component calculated in Section 1.6.9.3.D has an associated pollutant concentration. To find the pollutant concentrations associated with treated effluent, use Table 1-11 below. If using an alternative SCM, apply the effluent concentrations proven with approved testing protocols per Section 1.6.9.3.G.

For SCMs in series, pollutant concentrations are assumed not to increase as they travel through the treatment train. Therefore, for each individual pollutant, the effluent concentration after the final SCM in series shall be the minimum effluent concentration of any of the SCMs that are in that series.

C_{eff-1} = Treated effluent concentration for each pollutant (mg/L or CFU/100 mL)

(Add new table 1-11)

Table 1-11: Effluent Concentrations for Approved SCMs

Pollutant	**Unit**	C_{eff}					
		Infiltration Field[1]	Retention Basin[2] and Rain Gardens without Underdrain	Rainwater Harvesting[2]	Sedimenta-tion/ Filtration	Biofiltra-tion[3]	Approved Alternative SCM
COD	mg/L	38.9	43.79	43.79	22.4	22.4	Applicant Provided
EC	CFU/ 100 mL	8370	11065	11065	4895	4895	Applicant Provided
Pb	mg/L	0.00428	0.00831	0.00831	0.00574	0.00574	Applicant Provided
TN	mg/L	1.19	1.42	1.42	1.07	1.07	Applicant Provided
TP	mg/L	0.124	0.224	0.224	0.099	0.099	Applicant Provided
TSS	mg/L	166	134	134	20.62	20.62	Applicant Provided
Zn	mg/L	0.0236	0.0453	0.0453	0.0230	0.0230	Applicant Provided

Source: COA WPD, CM-13-02.

Table 1-11 Notes:

1. The infiltrated fraction is assumed to achieve background, or undeveloped, loads.

2. These SCMs, given sufficient settling time, are assumed comparable to sedimentation basins.

3. These SCMs are assumed comparable to sedimentation/filtration basins.

2. Bypass Pollutant Concentrations

Runoff that bypasses SCM 1 remains untreated. However, due to the first flush phenomena, the pollutant concentration in the bypass may be less than the event mean concentration. In this calculation

methodology, the bypass concentration is a function of SCM 1's water quality volume in inches. Different bypass concentrations are assigned depending on whether SCM 1 is off-line and isolates the water quality volume (typically a splitter is used) or on-line. Table 1-12 summarizes the bypass concentrations for the flows identified in Figure 1.6.9.3.A.1 and defined below.

$C_{by,1}$ = Pollutant concentration in flow that bypasses or overflows SCM 1 (mg/L or CFU/100 mL)

$C_{by,2}$ = Pollutant concentration in flow that bypasses SCM 2 (mg/L or CFU/100 mL)

(Add new table 1-12)

Table 1-12: Bypass Concentrations

Pollutant	**Units**	**SCM 1 Bypass Concentration, $C_{by,1}$ For *WQV* greater than or equal to 0.5 inches**		**SCM 2 Bypass Concentration, $C_{by,2}$**
		Off-line	**On-line**	
COD	mg/L	= exp[4.493-0.510(*WQV*)]	= exp[4.916-0.545(*WQV*)]	= C_{eff-1},Table 1-11
EC	CFU/ 100mL	= exp[10.18-0.465(*WQV*)]	= exp[10.79-0.624(*WQV*)]	= C_{eff-1},Table 1-11
Pb	mg/L	= 0.001·exp[2.882-0.489(*WQV*)]	= 0.001·exp[3.522-0.529(*WQV*)]	= C_{eff-1},Table 1-11
TN	mg/L	= exp[0.957-0.267(*WQV*)]	= exp[1.322-0.236(*WQV*)]	= C_{eff-1},Table 1-11
TP	mg/L	= exp[-0.613-0.469(*WQV*)]	= exp[-0.223-0.400(*WQV*)]	= C_{eff-1},Table 1-11
TSS	mg/L	= exp[5.290-0.934(*WQV*)]	= exp[5.862-0.765 (*WQV*)]	= C_{eff-1},Table 1-11
Zn	mg/L	= 0.001·exp[4.610-0.442(*WQV*)]	= 0.001·exp[5.200-0.531(*WQV*)]	= C_{eff-1},Table 1-11

Source: COA WPD, SR-14-10.

3. Treated Pollutant Load

Pollutant loads are found by multiplying the volume of each flow component by its associated concentration and then summing for every flow component that contributes to offsite runoff. For each drainage area *n*, find the pollutant load by evaluating the general expression in Equation 8.A:

$$L_n = A_n \cdot CF \cdot \Sigma\left(C_i \cdot V_i\right) \qquad \textbf{(Equation 8.A)}$$

Where:

L_n = the load of each pollutant in the runoff for a single drainage area (lb/yr or 10^6 CFU/yr)

A_n = Area of drainage area (Acres), see Section 1.6.9.3.B.2

CF = Conversion factor, see Section 1.6.9.3.B.6

C_i = The concentration associated with the ith flow stream (mg/L or CFU/100 mL)

V_i = The volume associated with the ith flow stream (in/yr)

Written more explicitly, Equation 8.A becomes Equation 8.B. Note that the infiltrated volume is omitted from the calculation, as only the load in surface runoff is considered.

$$L_n = A_n \cdot CF \cdot \Sigma\left(C_{eff\text{-}1} \cdot V_{by,2} + C_{eff\text{-}2} \cdot V_{T,2} + C_{by,1} \cdot V_{by,1}\right) \qquad \textbf{(Equation 8.B)}$$

Where:

L_n = the load of each pollutant in the runoff for a single drainage area (lb/yr or 10^6 CFU/yr)

A_n = Area of drainage area (Acres), see Section 1.6.9.3.B.2

CF = Conversion factor, see Section 1.6.9.3.B.6

$C_{eff\text{-}1}$ = Treated surface effluent concentration for each pollutant from first SCM in series (mg/L or CFU/100 mL), see Section 1.6.9.3.E.1

$V_{by,2}$ = Annual runoff volume treated by SCM 1 but bypassing SCM 2 (in/yr), see Section 1.6.9.3.D.4

$C_{eff\text{-}2}$ = Treated surface effluent concentration for each pollutant from second SCM in series (mg/L or CFU/100mL), see Section 1.6.9.3.E.1

$V_{T,2}$ = Annual average runoff volume treated but not infiltrated (or reused) (in/yr), see Section 1.6.9.3.D.3

$C_{by,1}$ = Pollutant concentration in flow that bypasses or overflows the first SCM in series (mg/L or CFU/100 mL), see Section 1.6.9.3.E.2

$V_{by,1}$ = Annual bypassed/untreated runoff volume (in/yr), see Section 1.6.9.3.D.4

4. Total Developed Pollutant Load

Find the total developed pollutant load for the entire site by summing the pollutant loads from each developed drainage area *n*, as in Equation 9:

$L_{out} = \sum L_n$ for n=1 to n_{max} **(Equation 9)**

Where:

L_{out} = the annual pollutant load off the entire site (lb/yr or 10^6 CFU/yr)

n_{max} = Total number of distinct drainage areas on the site

1.6.9.3.F. Compare the Proposed Developed Load to the Existing Load

Compare the developed pollutant load to the existing pollutant load for each of the pollutants. If the developed load is less than the existing pollutant load for all pollutants, then the site is compliant.

A quick way to demonstrate compliance is with the load equivalency factor (LEF), shown in Equation 10. The LEF normalizes the proposed load to the existing load.

$LEF_p = L_{out,p} / L_{Ex,p}$ **(Equation 10)**

Where:

LEF_p = Load equivalency factor for pollutant *p* (unitless)

If the LEF is less than or equal to one for every pollutant, then the proposed design is compliant. No further calculations are necessary to satisfy the requirements of Section 1.6.9.

If the LEF is greater than one for any pollutant *i*, then the proposed design is not compliant and the applicant shall modify their design. Options for design modifications include but are not limited to:

- Increase the water quality volume of the SCM(s).
- Increase the area of the infiltration field(s)
- Reduce the developed impervious cover

The applicant should iterate through the calculation procedure with the modified design until compliance is demonstrated.

~~C. **Alternative Data.**~~

~~Where pollutant load data for undeveloped or developed conditions, including pollutant concentrations and/or rainfall- runoff ratios, exist as a result of previous monitoring of a site or is collected specifically for the purpose or complying with the Code, an applicant may submit this data and documentation of the monitoring effort to the Director of the WPDR for review. If approved, the applicant may use it in lieu of using the standard pollutant concentrations and loading rates shown above. The information described below must be included in an Alternative Data Report submitted for review:~~

~~• Topographic maps showing the location of sampling points, with information showing that these sampling points provided data from undeveloped or developed areas and indicating why they are considered representative of the site as a whole (NOTE: Monitoring from the main stem of creeks, e.g. Barton Creek or its major tributaries, will not be acceptable as representative of stormwater from a site);~~

~~• A detailed description of the conditions in the drainage area to each monitoring point including but not limited to drainage plan, ponding areas, soil classification, level of development (percent impervious cover), type of development, and description of vegetative cover;~~

~~• A sampling plan describing the number of storm events sampled, protocol used to determine what storms were sampled, when samples were taken during a storm, the method of sample collection, and the period of time and dates when sampling occurred (In general, a minimum of ten storms should be monitored. For each storm a composite sample or a series of discrete samples should be collected. This sampling should essentially cover the entire range of the storm hydrograph.);~~

~~• A quality assurance/quality control plan indicating the laboratory which performed the analyses, the method of sample handling and preservation, the method of sample analysis, and the name of the person in charge of field collection; and~~

~~• Rainfall data and flow data at the sampling point for each storm sampled along with the rainfall and flow measurement systems used, as well as the methods for calibration and verification of the flow rating equation~~

~~An Alternative Data Report must be reviewed and approved by the Director of the WPDR prior to submitting a site plan application which utilizes the alternative monitoring data in calculating site baseline loads. The Alternative Data Report must include the information listed above, a copy of the raw data collected, and a discussion of the analysis methodology and evaluation of the data. No later than 30 calendar days after receipt of a complete application for approval of alternative data, the Director of the WPDR shall review the application and either: (1) approve the request, (2) request additional information, or (3) deny the request. No later than 30 calendar days after receipt of all requested additional information, the Director shall approve or deny the request. If the Director denies the request a letter will be provided to the applicant indicating the reason(s) therefor.~~

~~D. **Calculating Reduction in Pollutant Load Required to Achieve Baseline Loads.** For each developed drainage area, the pollutant removal rate in percent for each of the ten pollutants will be determined by the following equation:~~

~~**Equation 5:**~~

$$R_p = \frac{T_p - U_p}{T_p} \times 100$$

~~Where:~~

~~R_p = Removal rate for pollutant "P" in percent~~

~~T_p = Developed condition annual pollutant load for pollutant "P"~~

~~U_p = Baseline annual pollutant load for pollutant "P"~~

~~Where it is proposed that higher treatment levels occur in one drainage area to compensate for lower pollutant removal in another drainage area on the site, the applicant shall provide information which shows the following:~~

~~• Runoff from all areas of development shall be treated in a water quality control equivalent to sedimentation/filtration, except where a vegetated filter strip is determined by the Director of the WPDR to provide adequate treatment.~~

~~• The proposed higher removal efficiencies are achievable for the proposed level of development and type of water quality controls proposed;~~

~~• The discharge from the area with lower treatment is within the same named watershed as the discharge which provides higher load removal and that the confluence of the discharges occurs within ½ mile of the site;~~

~~• No significant recharge features are present in the receiving waterway below the area with lower pollutant load removal and prior to the confluence with the waterway which drains the area with better treated runoff.~~

~~E. **Design of Water Quality Controls Needed to Meet Required Reduction in Pollutant Load.** Controls may be used individually or in combined systems to meet the minimum load reduction requirement for each of the pollutants as calculated above. The following guidelines must be used in designing controls to treat runoff from developed sites to show compliance with Code requirements:~~

~~• The volume of runoff (water quality volume) to be captured by each water quality control required by the SOS Ordinance shall be determined using the runoff depths shown in Table 1-12 below.~~

~~**TABLE 1-12**~~
~~**REQUIRED WATER QUALITY CAPTURE VOLUME**~~

~~**Impervious Cover In Drainage Area**~~	~~**Total Runoff (in.)**~~

~~0%~~	~~0.60~~
~~5%~~	~~0.69~~
~~10%~~	~~0.78~~
~~15%~~	~~0.87~~
~~20%~~	~~0.96~~
~~25%~~	~~1.05~~
~~30%~~	~~1.14~~
~~35%~~	~~1.23~~
~~40%~~	~~1.32~~
~~45%~~	~~1.41~~
~~50%~~	~~1.50~~
~~55%~~	~~1.59~~
~~60%~~	~~1.68~~
~~65%~~	~~1.77~~
~~70%~~	~~1.86~~
~~75%~~	~~1.95~~
~~80%~~	~~2.04~~
~~85%~~	~~2.13~~
~~90%~~	~~2.22~~
~~95%~~	~~2.31~~
~~100%~~	~~2.40~~

~~• Vegetated filter strips shall be used to the maximum extent practicable for the treatment of stormwater runoff. Additional structural water quality controls shall be provided where a vegetated filter strip alone is not sufficient to reduce developed condition pollutant loads to background levels.~~

~~• Pollutant loads from all developed areas, including areas of impervious cover, lawns, landscaping, gardens, and other maintained areas, shall be considered when determining the level of treatment needed to comply with these regulations. Existing or restored natural areas which are restricted from development and pesticide, herbicide, or fertilizer application through a plat note or restrictive covenant may be excluded from this requirement.~~

~~• On-line treatment systems of any type shall be limited to a maximum treatment efficiency of 90 percent, because of the flushing of the control which may occur during large storm events.~~

~~• Removal efficiencies for water quality controls shall be as established in the Environmental Criteria Manual, or must be approved by the Director of the WPDR based on reports or studies contained in engineering or scientific literature as described in Section 1.6.9.3.G.~~

~~• Stormwater treatment systems for all developments shall be designed such that the full capture volume would be released over a 48 hour period. This will allow better treatment of VOCs, pesticides, herbicides, and other toxics.~~

~~• Where water quality control basins located in the Edwards Aquifer Recharge Zone are required to have liners, such liners shall be designed in accordance with the criteria in Section 1.6.5.D.3 of the Environmental Criteria Manual.~~

~~• Infiltration systems shall be designed and located to avoid impacts to existing springs and other Critical Environmental Features, including impacts resulting from the discharge of inadequately treated runoff at such locations.~~

~~F. **Design and Pollutant Removal Efficiency Calculations for Controls in Series.**~~

~~In order to achieve no increase in pollutant loads from developed sites in the Barton Springs Zone, a series of water quality controls may be appropriate. This section describes the minimum requirements for the design of controls in series.~~

~~Controls must be located in sequence where necessary to achieve the required removal rate. The sequence of controls shall be established based on sound engineering principles, such that the controls accomplish the intended purpose and minimize maintenance needs. All controls in a given series must be sized for the same runoff capture volume or be adequately designed to handle the rate of flow resulting from the release of that capture volume.~~

~~All infiltration systems treating runoff must be preceded by a sedimentation/filtration basin designed in accordance with the Environmental Criteria Manual. Alternatives to the use of sedimentation/ filtration must be approved by the Director of the WPDR.~~

~~Controls in series must utilize different treatment mechanisms. Identical or similar types of controls in series (e.g. sedimentation/ filtration followed by a second sedimentation/filtration basin) will not be acceptable unless it can be demonstrated that the second control can effectively remove pollutants not removed in the first control.~~

~~The efficiency of the second or later control in a series shall be adjusted downward in accordance with the following methodology to reflect the increasing difficulty of removing the remaining pollutant load. Equation 6 was derived from local monitoring data and has been incorporated into guidance documents by State and Federal (USFWS) agencies. The treatment efficiency for the first control shall be that established in the Environmental Criteria Manual or as approved by the Director. For the second control in a sequence, the standard or approved efficiency shall be reduced by 20 percent, and the efficiency of the third control shall be reduced by 70 percent. No additional pollutant removal is assumed beyond three controls, unless as approved by the Director. Equation 6 can only be used if the second and/or third BMPs in a series receive the same amount of runoff as the first BMP (within 10%). Otherwise the design engineer will be required to provide a technical analysis demonstrating the pollutant removal effectiveness of the system.~~

~~Equation 6:~~

$\cancel{E_{tot} = [1 - (1-E_1)(1-0.8E_2)(1-0.3E_3)] \times 100}$

~~E_{tot} = the total combined pollutant removal efficiency~~

~~E_1 = the efficiency of the first control (not in percent)~~

~~E_2 = the efficiency of the second control (not in percent)~~

~~E_3 = the efficiency of the third control (not in percent)~~

1.6.9.3.G. Evaluation of Alternative Stormwater Control Measures

~~**G. Evaluation of Alternative or Innovative Water Quality Controls**~~

All stormwater control measures not explicitly listed in 1.6.9.3.D, as well as those listed but that modify the standard designs in the Environmental Criteria Manual and/or that propose effluent concentrations that vary from Table 1-11, are considered alternative designs. Designs for alternative stormwater control measures must be reviewed and approved by the Director of the WPD, and the design criteria must be substantiated in the scientific and engineering literature.

The applicant shall submit an engineering report from a third party testing source to verify the effluent concentrations from the proposed alternative SCM. Appropriate third party testing sources include Accreditation Board for Engineering and Technology (ABET) approved universities, peer –reviewed, published journal articles, tests performed according to Technology Assessment Protocol-Ecology (TAPE) (Washington State Department of Ecology, 2011) or Technology Acceptance Reciprocity Partnership (TARP, 2003) protocols. Testing data provided only from the manufacturer, without certified third party testing, is unacceptable. Additional criteria used to determine the acceptability of the alternative design include: similarity of studied site to conditions in the Austin, Texas area including items such as rainfall patterns, soil characteristics, and type of development; applicability of study to the proposed site; and conformance of proposed design with that studied.

The applicant is encouraged to discuss proposed designs with the WPD staff at an early stage to ascertain the acceptability of all alternative or innovative design concepts. The final acceptability of data

shall be determined by the Director of the WPD. If approved, the applicant may use the data in pollutant load removal calculations to determine compliance with the appropriate Land Development Code requirements.

~~Designs for alternative or innovative water quality controls must be reviewed and approved by the Director of the WPDR and the design criteria must be substantiated in the scientific and engineering literature. All modifications to the standard designs for water quality controls shown in the Environmental Criteria Manual, including proposals for higher removal efficiencies for standard designs, will be considered as alternative designs.~~

~~Criteria to be used in determining the acceptability of alternative or innovative designs shall include:~~

~~• Similarity of studied site to conditions in the Austin, Texas area, including such items as rainfall patterns, soil characteristics, and type of development~~

~~• Applicability to the proposed site~~

~~• Conformance of proposed design with that studied~~

~~Pollutant removal efficiencies for alternative or innovative controls must be substantiated in the scientific or engineering literature or supported by an Alternative Data Report prepared in accordance with the procedures of Section 1.6.9.3.C.~~

~~The applicant is encouraged to discuss proposed designs with the WPDR staff at an early stage to ascertain the acceptability of all new or innovative design concepts.~~

1.6.9.3.F References

Adams, B. J., & Papa, F. (2000). *Urban Stormwater Management Planning with Analytical Probabilistic Models.* New York: John Wiley & Sons, Inc.

Stormwater Quality Evaluation Section, Watershed Protection Department. (2013). *Impacts of Stormwater Control Measures on Water Quality in Austin, TX.* (Report Number CM-13-02). Austin, Texas: City of Austin Watershed Protection Department.

Technology Acceptance Reciprocity Partnership (TARP). (2003). *Protocol for Stormwater Best Management Practice Demonstrations*.

Water Quality Monitoring Section, Watershed Protection Department. (2009). *Stormwater Runoff Quality and Quantity from Small Watersheds in Austin, TX: Updated through 2008.* (Report Number CM-09-03). Austin, Texas: City of Austin Watershed Protection Department.

Water Quality Program, Washington State Department of Ecology. (2011). *Technical Guidance Manual for Evaluating Emerging Stormwater Treatment Technologies: Technology Assessment Protocal – Ecology (TAPE).* (Report Number 11-10-061). Olympia, Washington: Washington State Department of Ecology.

Water Resource Evaluation Section, Watershed Protection Department. (2014). *BMP Bypass Pollutant Concentrations Based on Storm Runoff Concentrations.* (Report Number SR-14-10). Austin, Texas: City of Austin Watershed Protection Department.