1.6.9.3 - Control Measure Design

For each site within the Barton Springs Zone, the average annual stormwater pollutant load for the specified pollutants (Section 1.6.9.3.B.1) discharged from a site shall not exceed the existing pollutant load. This is the non-degradation requirement. A series of steps for calculating whether a site's proposed conditions meet non-degradation requirements in the Barton Springs Zone is provided below:

- Calculating existing condition loads (Section 1.6.9.3.B);
- Calculating developed conditions uncontrolled runoff volume and pollutant concentrations (Section 1.6.9.3.C);
- Identifying the stormwater control measures that are currently approved for use within the Barton Springs Zone (Section 1.6.9.3.D);
- Calculating the effluent pollutant concentration of controls operating in series (Section 1.6.9.3.E);
- Calculating proposed developed condition loads (Section 1.6.9.3.E);
- Determining whether the proposed developed condition load complies with non-degradation requirements (Section 1.6.9.3.F); and
- Evaluating alternative stormwater control measures, if applicable (Section 1.6.9.3.G).

For stormwater control measures that do not discharge directly to the surface drainage system (i.e. infiltration measures), the proposed treatment methodology shall be designed to meet the pollutant loading reduction requirements for runoff prior to the treated runoff's re-emergence to the surface or entering the local groundwater system.

To the maximum extent feasible, areas of the site which are to remain undisturbed and undeveloped should not contribute runoff to a proposed developed area and are excluded from the calculations. Such undeveloped areas must remain in their natural condition and must be protected by a plat note or restrictive covenant referenced on the site plan and filed with the appropriate County to prevent the application of fertilizers or pesticides and to limit the disturbance of the natural areas. The removal of diseased or damaged trees or other plants which pose a hazard to health and safety or which pose a threat to the health of other plants in the area may be allowed, upon review and approval of the Watershed Protection Department (WPD).

A. Definitions.

1. Existing conditions. Existing conditions is a reference condition against which to compare ~~proposed future development~~ developed conditions for the purposes of calculating pollutant loads in this section. (ECM Section 1.6.9.3.B). When calculating existing conditions load, use base impervious cover. (ECM 1.9.2.B). ~~Existing conditions refer to the permitted development on the site on the effective date of the project application. However,~~ ~~e~~Existing conditions does not include development constructed in violation of City Code. ~~If the existing condition of the site is undeveloped, it is also at its baseline condition. However, the site may already contain development. Refer to Section 1.9.2 for the definition of base impervious cover in the Barton Springs Zone.~~

2. Developed conditions. Developed conditions represents the site characteristics under the proposed future development or redevelopment for the purposes of calculating pollutant loads in this section.

~~2.~~ 3. Stormwater Control Measure. All stormwater runoff treatment systems in this section are referred to as stormwater control measures (in short, SCMs or controls). SCMs are also commonly known as best management practices (BMPs).

~~3.~~4. Calculation Variables and Conceptual Layout. The pollutant load calculations in Section 1.6.9.3.B are based on a mass balance on the developed site runoff streams. Figure 3.A.1 shows an example conceptual layout of a site with multiple drainage areas and treatment trains. The applicant may customize the layout for their site by varying: the number of drainage areas, the presence, absence, type, and size of each SCM, and the flow volumes directed to each SCM. Each SCM and treatment train shall comply with requirements listed in Sections 1.6.9, 1.6.7, and other applicable Sections.

The goal of the ordinance is to treat all of the developed land. In the event that it is not physically possible to route all developed area runoff to an SCM, the runoff from the remaining developed drainage areas shall be treated to a greater extent such that the entire developed site load meets non-degradation requirements.

Figure 1.6.9.3.A.1: Example site showing two developed drainage areas, two SCM treatment trains, and associated calculation variables.

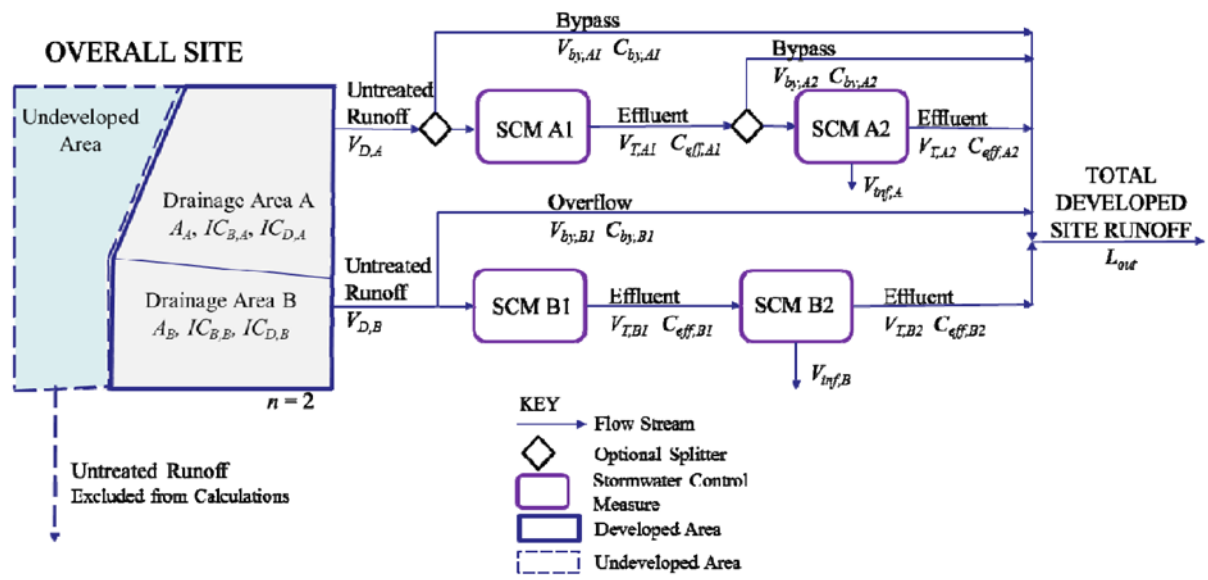

The following list summarizes the variables that will be introduced in the calculation procedure in Sections 1.6.9.3.B through 1.6.9.3.F:

A_{field} = Irrigation field size (Acres)

A_n = Area of each drainage area (Acres)

b = Interevent time (hours)

C_{Ex} = Pollutant concentration for existing conditions (mg/L or CFU/100 mL)

$C_{by,1}$ = Pollutant concentration in flow that bypasses or overflows the first SCM in series (mg/L or CFU/100 mL)

$C_{by,2}$ = Pollutant concentration in flow that bypasses the second SCM in series

C_D = Pollutant concentration for developed conditions (mg/L or CFU/100 mL)

C_{eff} = Treated surface effluent concentration for each pollutant (mg/L or CFU/100 mL)

C_i = The concentration associated with the ith flow stream (mg/L or CFU/100 mL)

$C_{inf,2}$ = Infiltrated concentration for each pollutant for the second SCM in series (mg/L or CFU/100mL)

CF = Conversion factor

For pollutant in mg/L CF = 0.2267 [lb-L/(mg-Ac-in)]

For pollutant in CFU/100 mL CF = 1.0279 [100 mL/(Ac-in)]

DDT = Drawdown time, or time for control to empty its full water quality volume, starting at the beginning of drawdown (hours)

I = Field-verified infiltration rate (in/hr)

IC_B = Base impervious cover (percentage, 0 to 100)

IC_D = Developed impervious cover (percentage, 0 to 100)

LEF_p = Load equivalency factor for pollutant p (unitless)

L_{Ex} = Existing pollutant load (lb/yr or 10^6 CFU/yr)

L_n = The load of each pollutant in the runoff for a single drainage area n (lb/yr or 10^6 CFU/yr)

L_{out} = The annual pollutant load off the site (lb/yr or 10^6 CFU/yr)

m = Peak discharge multiplication factor (unitless)

n = Drainage area ID number

n_z = Number of application zones where irrigation is alternated

n_{max} = Total number of distinct drainage areas on the site

p = Pollutant ID

RCE = Runoff Capture Efficiency, or percent of total drainage area runoff that is captured on an average annual basis (%)

RCE_{inf} = Runoff capture efficiency for infiltrated (or reused) volume on an annual average basis (%)

R_v = Runoff-rainfall ratio (unitless)

S_d = Depression storage (inches)

t = Mean annual rainfall event duration (hours)

t_D = Drain time for full control to empty, starting at end of rain event (hours)

LT = Lag time between end of rain event and beginning of drawdown (hours)

v = Mean annual rainfall event volume (inches)

$V_{by,1}$ = Annual bypassed/untreated runoff volume (in/yr)

$V_{by,2}$ = Annual runoff volume treated by SCM 1 but bypassing SCM 2 (in/yr)

V_D = Developed annual runoff volume (in/yr)

V_{Ex} = Existing annual runoff volume (in/yr)

V_i = The volume associated with the ith flow stream (in/yr)

V_{inf} = Annual average volume that is infiltrated (or reused) (in/yr)

$V_{T,1}$ = Annual average runoff volume treated by the first SCM in series (in/yr)

$V_{T,2}$ = Annual average runoff volume treated by SCM 2 but not infiltrated (or reused) (in/yr)

WQV = Water quality volume, or storage volume in SCM 1, normalized to the drainage area (inches)

WQV_{inf} =Infiltrated (or reused) water quality volume normalized to the drainage area (inches)

B. Calculating Pollutant Load for Existing Conditions.

1. Pollutants. Existing and developed pollutant loads shall be calculated for the following pollutant species:

   Chemical Oxygen Demand (COD)

   Escherichia coli, (EC)

   Total Lead (Pb)

   Total Nitrogen (TN)

   Total Organic Carbon (TOC)

   Total Phosphorus (TP)

   Total Suspended Solids (TSS)

   Total Zinc (Zn)

   Although cadmium (Cd) is also a pollutant of concern, cadmium levels are typically lower than City of Austin monitoring detection limits. Therefore there is insufficient monitoring data to publish cadmium runoff concentrations. Zinc is more easily detected, therefore zinc (Zn) concentrations are calculated to determine compliance. See Section 1.6.9.2.B for additional cadmium requirements.

2. Drainage Areas. Each site shall be subdivided into one or more drainage areas. Pollutant load calculations shall be provided for each drainage area that contains any development, including both impervious and pervious cover, regardless of whether it drains to proposed stormwater control measures or does not drain to any stormwater control measure. The following variables shall correspond to each drainage area:

   A_n = Area of drainage area (Acres)

   n = Drainage area ID number

   Flows from off-site as well as undeveloped areas should be diverted around proposed developed drainage areas. Such diversions may be constructed as open waterways or closed conduits. If swales or berms are used, they must be revegetated and located such that they do not receive on-site flow from developed areas. If flows from off-site and undeveloped areas are not diverted, the total contributing area must be considered when calculating the existing load, developed load, and volume to be captured and treated. However, undeveloped and offsite areas shall not be used to decrease average impervious cover percentage of the drainage area. Where a drainage area must include off-site drainage, the water quality volume associated with the drainage area shall be no less than the required water quality volume for the developed area alone.

3. Base Impervious Cover. Each drainage area has an associated base impervious cover, which is defined in Section 1.9.2. Note that base impervious cover may be 0%, such as if the site is undeveloped or if the entire site is redeveloped, or it may be greater than 0%.

   IC_B = Base impervious cover (percentage, 0 to 100)

4. Existing Runoff. Each drainage area has an associated existing yearly runoff, which can be interpolated from Table 1-9, below. The table was developed from monitoring data collected and analyzed by the City of Austin. From the data, correlations were developed which relate a site's impervious cover to its runoff-rainfall ratio, R_v, and depression storage, S_d (Glick et al. 2009). Through an additional procedure (Adams & Papa, 2000) these variables were further correlated to annual runoff volume, V, as a function of impervious cover.

   V_{Ex} = Existing annual runoff volume, a function of IC_B (in/yr)

Table 1-9: Yearly Runoff as a Function of Impervious Cover.

Impervious Cover, IC (%)	Runoff-Rainfall Ratio, R_v	Depression Storage, S_d (in)	Annual Number of Runoff Events, θ	Annual Runoff, V (in/yr)
0	0.064	0.218	46	1.18
5	0.1	0.198	48.4	1.94
10	0.136	0.18	50.6	2.76
15	0.172	0.163	52.8	3.63
20	0.208	0.148	54.8	4.55
25	0.243	0.134	56.7	5.52
30	0.279	0.122	58.5	6.54
35	0.315	0.11	60.2	7.59
40	0.351	0.1	61.8	8.67
45	0.387	0.091	63.2	9.78
50	0.423	0.082	64.6	10.91
55	0.458	0.075	65.8	12.06
60	0.494	0.068	66.9	13.23

65	0.53	0.062	68	14.42
70	0.566	0.056	69	15.61
75	0.602	0.051	69.9	16.82
80	0.637	0.046	70.7	18.03
85	0.673	0.042	71.5	19.24
90	0.709	0.038	72.2	20.46
95	0.745	0.034	72.8	21.69
100	0.781	0.031	73.4	22.91
Austin Total	—	—	79.3	31.7

Source: COA WPD, CM-09-03.

5. Pollutant Concentration. Each drainage area has an associated existing pollutant concentration. The standard concentrations for the 8 pollutants, based on local monitoring data collected and analyzed by the City of Austin, are shown in Table 1-10, below. When determining pollutant concentrations, the applicant shall use column A for all cases where any development exists, including where the development is pervious (i.e. landscaped areas), and column B only where the site has no existing development.

   C_{Ex} = Pollutant concentration for existing conditions (mg/L or CFU/100 mL)

Table 1-10: Pollutant Concentrations in Surface Runoff

Pollutant, i		Pollutant Concentration, C_{Ex} or C_D	
		A Site Contains Development (IC ≥ 0%)	B Site Completely Undeveloped (IC = 0%)
COD	mg/L	= 38.9 + 66.6·IC	38.9
E. coli	CFU/100 mL	25000	8370
Pb	mg/L	= 0.00428·exp(2.42·IC)	0.00428
TN	mg/L	2.22	1.19

TOC	mg/L	13.03	13.03
TP	mg/L	0.396	0.124
TSS	mg/L	166	166
Zn	mg/L	= 0.0236·exp(2.18·IC)	0.0236

Source: COA WPD, CM-09-03.

6. Pollutant Load. To calculate the existing pollutant load, evaluate Equation 1 for each of the eight pollutant species for each drainage area.

   $L_{Ex} = C_{Ex} \cdot V_{Ex} \cdot A_n \cdot CF$ (Equation 1)

   Where:

   L_{Ex} = Existing pollutant load (lb/yr or 10^6 CFU/yr)

   C_{Ex} = Pollutant concentration for existing conditions (mg/L or CFU/100 mL), see Section 1.6.9.3.B.5

   V_{Ex} = Existing annual runoff volume (in/yr), See Section 1.6.9.3.B.4

   A_n = Area of drainage area (Acres), see Section 1.6.9.3.B.2

   CF = Conversion factor

   CF (pollutant in mg/L) = 0.2267 (lb-L/mg-Ac-in)

   CF (pollutant in CFU/100 mL) = 1.0279 (100 mL/Ac-in)

C. Calculating the Developed Conditions Runoff Volume and Pollutant Concentrations.

1. Impervious Cover. Calculation of developed condition pollutant loads must use the same drainage area used to determine the existing conditions loads. Within each drainage area, the total developed impervious cover will be determined as a percent of the gross drainage area. Total developed impervious cover includes all base impervious cover, new impervious cover, and redeveloped impervious cover as defined in Section 1.9.2.B. All developed areas, including areas of impervious cover, lawns, landscaping, gardens, and other maintained pervious areas, shall be included in the developed impervious cover percentage calculation and should be routed to a control. Existing or restored natural areas which are restricted from development, and pesticide, herbicide, or fertilizer application through a plat note or restrictive covenant shall be excluded from the drainage area and associated impervious cover calculations; refer to Section 1.6.9.3.B.2.

   IC_D = Developed impervious cover (percentage, 0 to 100)

2. Runoff. Each developed drainage area has an associated annual average runoff volume that is a function of the developed impervious cover. This value can be interpolated from Table 1-9, above.

   V_D = Developed annual runoff volume (in/yr), a function of IC_D

3. Pollutant Concentration. The runoff from each developed drainage area, prior to treatment by any control, has an associated pollutant concentration for developed conditions. This concentration can be found in Column A of Table 1-10, above.

   C_D = Pollutant concentration for developed conditions (mg/L or CFU/100 mL)

1.9.2 - Requirements For Water Quality Controls In The Uplands Zone

Water quality control requirements vary with watershed regulatory category and development situation, as described below. In some instances, it may not be possible to collect all areas of a development to a water quality control. In those cases, it may be acceptable to treat an approved equivalent area. The approved equivalent area must be an area that does not currently receive treatment and is not likely to be treated in the future such as those areas that meet the definition of base impervious cover, public right-of-ways and/or single family subdivisions. An approved equivalent area is hereby defined as ~~up~~ one (1) to one and one half (1.5) times the proposed impervious cover area that requires water quality controls.

A. Criteria For Urban Watersheds

An alternative to providing on-site water quality controls is provided for in LDC Section 25-8-214, Optional Payment in Lieu of Structural Water Quality Controls in Urban Watersheds. Additional information is provided in Appendix T of the Environmental Criteria Manual, "Request for Fee in Lieu of Water Quality Controls in the Urban Watersheds." In addition, under 25-8-215, a person who redevelops property in an Urban Watershed qualifies for Cost Recovery by the City if the following Criteria are met:

1) Construction of structural controls

   a. Redeveloped portion is greater than 1 acre; and

   b. Structural control treats at least 10 acres of previously untreated off-site drainage, in addition to the ECM required volume required for redevelopment.

2) Payment in lieu of structural controls

   a. Project drains to an existing or proposed regional structural control funded by Urban Structural Control Fund. Pond must have capacity to treat proposed development at ECM levels.

Upon either of the aforementioned conditions being met, the City may reimburse the applicant according to Part D of Appendix T. If Cost Recovery is pursued in addition to City of Austin Cost Participation for a Regional Water Quality Pond via a Community Facilities Contract, the maximum COA reimbursement shall not exceed 100% of the cost of the pond.

Base impervious cover is that which both existed on the site on the effective date of the Urban Watershed Ordinance (September 10, 1991) and which currently exists at the time of application for a new or revised permit, or which is permitted or existing for which water quality controls have been provided, and is not proposed to be redeveloped. If any portion of base impervious cover is redeveloped or proposed to be redeveloped, that portion becomes redeveloped impervious cover as defined below and is no longer base impervious cover. New impervious cover is the cumulative total of all impervious cover added or proposed to be added to a project since the effective date of the Urban Watershed Ordinance, and for which water quality controls have not been previously provided. Redeveloped impervious cover is the cumulative total of all impervious cover redeveloped or proposed to be redeveloped on a project since the effective date of the Urban Watershed Ordinance, and for which water quality controls have not been previously provided. Cumulative total of impervious cover shall include that impervious cover added to a site under one or more of the following: permits, site plans, exemptions, waivers, or unapproved development. This shall apply to each site plan or development permit regardless of the number of lots within that plan or permit.

For all levels of impervious cover, projects in the Urban Watersheds must provide water quality controls when the cumulative total of both new and redeveloped impervious cover exceeds 8,000 square feet. Water quality controls must be added for 100% of the area of development containing new impervious cover or redeveloped impervious cover. The area of development containing base impervious cover does not require water quality controls unless it is redeveloped.

~~When required above, water quality controls shall be provided according to the following typical situations.~~

~~SITUATION~~	~~REQUIREMENT~~
~~Impervious cover is added to a site where no impervious cover exists~~	~~Provide controls for 100% of the area of development containing new impervious cover~~
~~Impervious cover is added to a site with base impervious cover~~	~~Provide controls for 100% of the area of development containing new impervious cover, or approved equivalent area~~
~~Impervious cover is added to a site with new impervious cover~~	~~Provide controls for 100% of the area of development containing new impervious cover~~
~~Redeveloped impervious cover~~	~~Provide controls for 100% of the area of development containing redeveloped impervious cover, or an approved equivalent area~~

B. Criteria For Barton Springs Zone

1. SOS ORDINANCE (920903D)

Base impervious cover is that which both existed on the site on May 18, 1986, and which currently exists at the time of application for a new or revised permit, or which is permitted or existing for which water quality controls have been provided, and is not proposed to be redeveloped. If any portion of base impervious cover is redeveloped or proposed to be redeveloped, that portion becomes redeveloped impervious cover as defined below and is no longer base impervious cover. New impervious cover is the cumulative total of all impervious cover added or proposed to be added to a project since May 18, 1986, and for which water quality controls have not been previously provided. Redeveloped impervious cover is the cumulative total of all redeveloped impervious cover or proposed redeveloped impervious cover since May 18, 1986, and for which water quality controls have not been previously provided. Cumulative total of impervious cover shall include that impervious cover added to a site under one or more of the following: permits, site plans, exemptions, waivers, or unapproved development. This shall apply to each site plan or development permit regardless of the number of lots within that plan or permit.

According to Section 25-8-514 of the Land Development Code, all development requires that water quality controls and onsite pollution prevention techniques be provided which result in no increases in respective average annual loading of the specified pollutants~~, according to the following typical situations~~. Water quality controls must be added for 100% of the area of new development or redevelopment. Base impervious cover does not require treatment unless it is redeveloped. ~~(~~Refer to section 1.6.9 ECM for design information.~~)~~

Section 25-8-516 excludes the application of SOS to development limited to a total of 8,000 SF for existing tracts and platted lots existing as of November 1, 1991. Development excluded from these provisions should follow the requirements set forth under the following Section 1.9.2C "Criteria for Watersheds other than Barton Springs Zone and Urban."

~~SITUATION~~	~~REQUIREMENT~~

~~Impervious cover is added to a site where no impervious cover exists~~	~~Provide controls for 100% of the area of development containing new impervious cover~~
~~Impervious cover is added to a site with base impervious cover~~	~~Provide controls for 100% of the area of development containing new impervious cover, or approved equivalent area~~
~~Impervious cover is added to a site with new impervious cover~~	~~Provide controls for 100% of the area of development containing new impervious cover~~
~~Redeveloped impervious cover~~	~~Provide controls for 100% of the area of development containing redeveloped impervious cover, or an approved equivalent area~~

2. Redevelopment Exception

Section 25-8-26 of the Land Development Code provides an exception for redevelopment in SOS regulated areas. If proposed development is opting to comply with 25-8-26 (Barton Springs Zone Redevelopment Exception) refer to ECM Appendix Q-4 for water quality control requirements.

C. Criteria For Watersheds Other Than Barton Springs Zone And Urban

Base impervious cover is that which existed on the site on the effective date of the Comprehensive Watershed Ordinance which is May 18, 1986, and which currently exists at the time of application for a new or revised permit, or which is permitted or existing for which water quality controls have been previously provided, and is not proposed to be redeveloped. If any portion of base impervious cover is redeveloped or proposed to be redeveloped, that portion becomes redeveloped impervious cover as defined below and is no longer base impervious cover. New impervious cover is the cumulative total of all impervious cover added or proposed to be added to a project since May 18, 1986, and for which water quality controls have not been provided. Redeveloped impervious cover is the cumulative total of all redeveloped or proposed redeveloped impervious cover since May 18, 1986, and for which water quality controls have not been previously provided. Cumulative total of impervious cover shall include that impervious cover added to a site under one or more of the following: permits, site plans, exemptions, waivers, or unapproved development. This shall apply to each site plan or development permit regardless of the number of lots within the plan or permit.

Projects in watersheds other than the Barton Springs Zone and the Urban watersheds, must provide water quality controls when impervious cover results in a cumulative total of more than 8,000 square feet of both new and redeveloped impervious cover. Water quality controls must be added for 100% of the area of development containing new impervious cover or redeveloped impervious cover. The area of development containing base impervious cover does not require water quality controls unless it is redeveloped.

~~SITUATION~~	~~REQUIREMENT~~
~~Impervious cover is added to a site where no impervious cover exists~~	~~Provide controls for 100% of the area of development containing new impervious cover~~

~~Impervious cover is added to a site with base impervious cover~~	~~Provide controls for 100% of the area of development containing new impervious cover, or approved equivalent area~~
~~Impervious cover is added to a site with new impervious cover~~	~~Provide controls for 100% of the area of development containing new impervious cover~~
~~Redeveloped impervious cover~~	~~Provide controls for 100% of the area of development containing redeveloped impervious cover, or an approved equivalent area~~